# JEFFERSON PARISH
# LOUISIANA

**PURCHASING DEPARTMENT**

Our Mission Is:
"Provide the services, leadership, and vision to improve the quality of life in Jefferson Parish."

STEVE J. THERIOT
PARISH PRESIDENT

May 20, 2010

**ADDENDUM #1**

PATRICIA W. LASSALLE
PURCHASING DIRECTOR

**Bid No.: 50-97299** **Bid Opening Date: 05/25/2010**

For: LABOR, MATERIALS AND EQUIPMENT NECESSARY TO INSTALL SODIUM HYPOCHLORITE GENERATION EQUIPMENT AT THE BRIDGE CITY WASTEWATER TREATMENT PLANT - SCIP PROJECT C11

## PLEASE NOTE THE FOLLOWING INFORMATION CONCERNING THE BID SPECIFICATIONS AND ADJUST YOUR BID ACCORDINGLY:

Questions:

1) Q. What is the depth below grade of the concrete that needs to be removed?
   A. The depth below grade to the top of the concrete, to the best of our knowledge, is approximately 5 to 7 feet.
2) Q. Are we to reuse existing piles? If so, what is the tip depth? If not, do we have to extract them or can we just cut them off at grade?
   A. Reuse the existing piles. The piles were installed according to the drawings included in this bid package.
3) Q. We would like to have weights on all owner furnished equipment.
   A. We do not have this information at this time. Please contact the equipment manufacturer.
4) RE Notes Dwg ML – 00 Sht 2 –
   a. Q. Is ventilation in the existing building required? Dwg. note states that ventilation is sized by others.
      A. The existing ventilation is sufficient. No additional ventilation is required.
   b. Q. Are existing floor drains adequate for the new equipment? Dwg. note states floor drain required for equipment.
      A. The additional floor drains are sufficient. No additional floor drains are required.
5) Q. Is the owner providing all non destructive testing required by the specification?
   A. Yes.
6) Q. Can we get electronic PDF drawings from Perrin and Carter?
   A. PDF Drawings are attached to this Addendum No. 1.

Attachments:
Equipment and Piping Layout (2 pages)
General Notes and Foundation & Containment Plan – S1.0 (1 page)
Foundation and Containment Sections – S2.0 (1 page)
Piping and Instrumentation Diagram (4 pages)
Pump Skid Assembly (1 page)
Field Wiring Diagram (4 pages)
Pre-bid Conference sign-in sheet (2 pages)

P.O. BOX 9 – GRETNA, LOUISIANA 70054-0009
200 DERBIGNY STREET, SUITE 4400 – GRETNA, LOUISIANA 70053
(504) 364-2678 – FAX PHONE (504) 364-2693

**BID OPENING DATE WILL REMAIN THE SAME**

**THIS ADDENDUM FORMS A PART OF THE CONTRACT DOCUMENTS AND MODIFIES THE ORIGINAL BIDDING DOCUMENTS AND SPECIFICATIONS. THE CONTENTS OF THIS ADDENDUM SHALL BE INCLUDED IN THE CONTRACT DOCUMENTS. CHANGES MADE BY THIS ADDENDUM SHALL TAKE PRECEDENCE OVER THE DOCUMENTS OF EARLIER DATE.**

Sincerely,

Stella Vasquez

Stella Vasquez, Buyer II
JP Purchasing Department

| REV | DATE | DESCRIPTION | DRAWN BY | CHECKED BY | APPROVED BY |
|---|---|---|---|---|---|
| 0 | 4.27.08 | ISSUED FOR APPROVAL | SM | | |
| 1 | 5.27.08 | FOR CHANGES SEE SHEET 2 | SM | | |
| 2 | 6.06.08 | FOR CHANGES SEE SHEET 2 | BCW | JB | SM |
| 3 | 7.01.08 | REVISED LOCATIONS OF TIE DOWN LUGS AND LIFTING CHANNELS | SM | | |

# BRIDGE CITY

## JEFFERSON PARISH, LA

## CT-450 (450 lbs/Day) RACK MOUNTED

## ON-SITE SODIUM HYPOCHLORITE GENERATION SYSTEM

## EQUIPMENT & PIPING LAYOUT


SEVERN TRENT SERVICES

CLORTEC

2660 Columbia Street Torrance, Ca. 90503

TELEPHONE No: (310) 533-5840 E-MAIL:

FAX No: (310) 618-1384 WEB SITE: www.severntrentservices.com


UNLESS OTHERWISE NOTED

TOLERANCES

| TYPE: | INCHES | [MM] |
|---|---|---|
| FRACTIONS | ± 1/8" | |
| .X | ± .1" | ± 2.5 |
| .XX | ± .02" | ± .51 |
| .XXX | ± .005" | ± .127 |
| ANGLES | ± 1° | |


NOTICE OF CONFIDENTIALITY

THIS DOCUMENT CONTAINS PROPRIETARY INFORMATION THAT IS AND SHALL REMAIN THE PROPERTY OF SEVERN TRENT WATER PURIFICATION, INC AND IS TO BE RETURNED IMMEDIATELY UPON REQUEST. ITS CONTENTS MAY NOT BE REPRODUCED, DISTRIBUTED, CIRCULATED, OR DISCLOSED TO THIRD PARTIES. RECIPIENT WILL NOT USE THIS INFORMATION FOR ANY PURPOSES WITHOUT PRIOR WRITTEN CONSENT OF SEVERN TRENT WATER PURIFICATION, INC.


BRIDGE CITY
JEFFERSON PARISH, LA

CT-450 (450 LBS/DAY)
RACK MOUNTED ON-SITE SODIUM
HYPOCHLORITE GENERATION SYSTEM
EQUIPMENT & PIPING LAYOUT

| SCALE: | CLORTEC JOB No: | SIZE: | REV: |
|---|---|---|---|
| NTS | CP00060 | B | 3 |

DWG No CP00060-ML-00

SHEET 1 OF 2

| REV | DATE | DESCRIPTION | DRAWN BY | CHECKED BY | APPROVED BY |
|---|---|---|---|---|---|
| 0 | 4.27.08 | ISSUED FOR APPROVAL | SM | | |
| 1 | 5.27.08 | ADDED EXISTING TANK | SM | | |
| 2 | 6.06.08 | ADDED PIPING | BCW | JB | SM |
| 3 | 7.01.08 | REVISED LOCATIONS OF TIE DOWN LUGS AND LIFTING CHANNELS | SM | | |

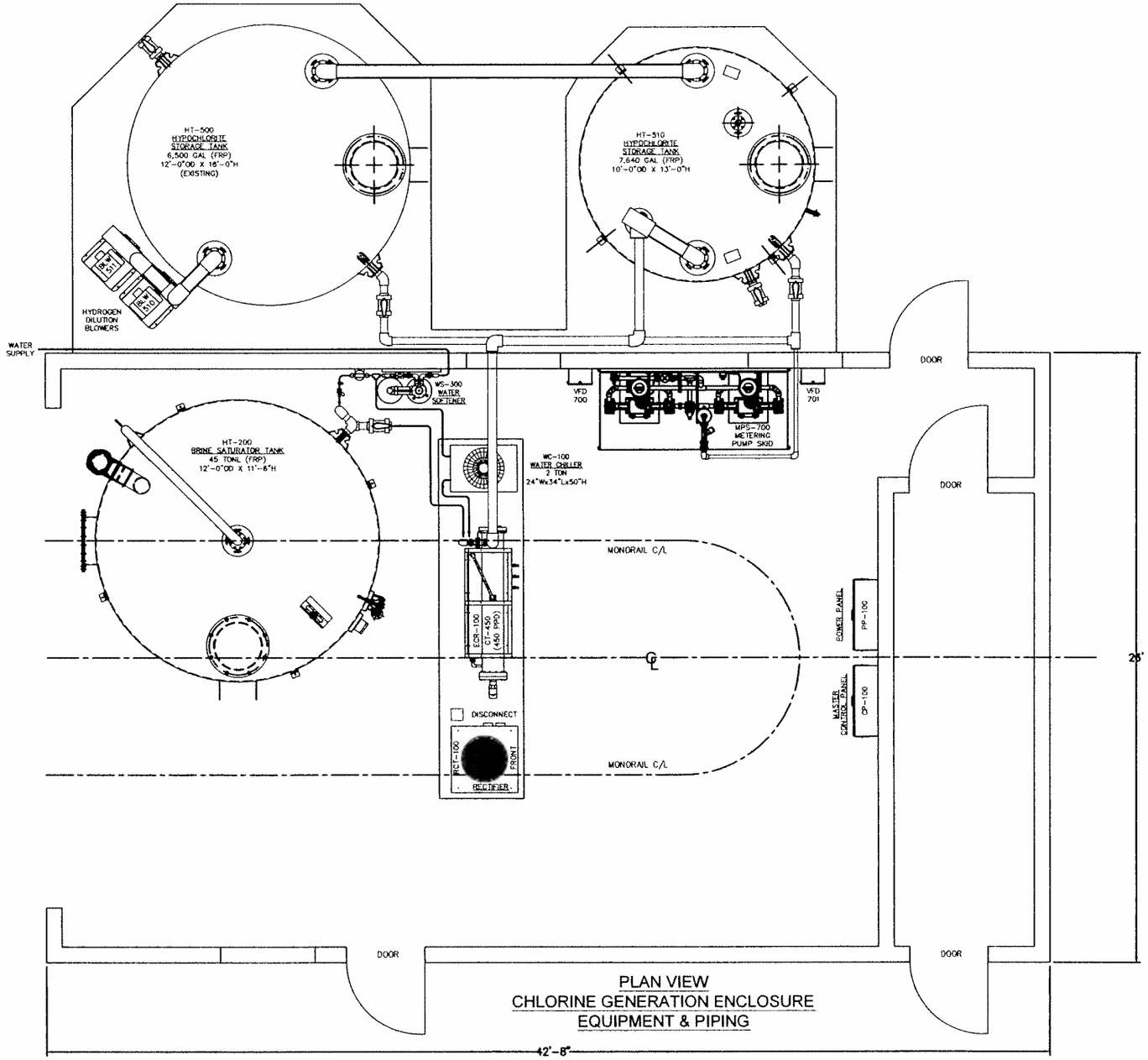


PLAN VIEW
CHLORINE GENERATION ENCLOSURE
EQUIPMENT & PIPING

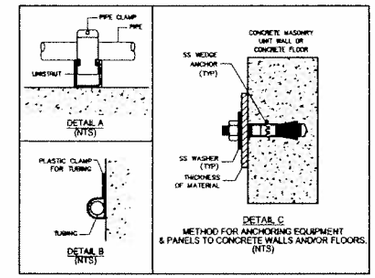


NOTE:

THE DIMENSIONS OF THIS HYPOCHLORITE GENERATION ROOM MIGHT NOT CORRESPOND TO FIELD CONDITIONS. THIS IS ONLY A REPRESENTATION OF THE SPACE REQUIRED TO ACCOMODATE CT-450 CELL RACK AND THE ASSOCIATED COMPONENTS SPECIFIED FOR THIS PROJECT.

NOTES:

1. ALL PIPING, FITTINGS & VALVES ARE PVC SCH. 80. ALL TUBING ARE BLACK POLYETHYLENE.
2. EXACT LOCATION OF EQUIPMENT AND INTERCONNECTING PIPING ROUTING MAY VARY DEPENDING ON FIELD CONDITIONS.
3. ELECT. POWER, WATER SUPPLY, POINT OF INJECTION AND SCADA INTERFACE AND PIPE IDENTIFICATION/LABELING ARE DONE BY OTHERS.
4. ALL UNDERGROUNG & CONCRETE WORK, WALL AND ROOF PENETRATIONS ARE DONE BY OTHERS.
5. STWP RECOMMENDS ADDING FLOOR DRAINS FOR THE RACKS, THE WATER SOFTENERS AND THE TANKS.
6. ALL ELECTRICAL CONDUITS, WIRING ,JUNCTION AND PULL BOXES WILL BE PROVIDED BY OTHERS.
7. ALL PAINTING AND COATING TO BE PROVIDED BY OTHERS.
8. ALL BACKBOARDS AND SUPPORTS TO BE PROVIDED BY OTHERS.
9. PROPER ROOM VENTILATION SHOULD BE SIZED BY OTHERS.
10. BRINE TANK AND HYPOCHLORITE STORAGE TANKS SHOULD BE ON TANK PADS
11. HYDROGEN DILUTION BLOWERS SHOULD BE ELEVATED FROM TANK PAD.


SEVERN TRENT SERVICES
CLORTEC
2660 Columbia Street Torrance, Ca. 90503
TELEPHONE No: (310) 533-5849 E-MAIL:
FAX No: (310) 618-1364 WEB SITE: www.severntrentservices.com


BRIDGE CITY
JEFFERSON PARISH, LA

CT-450 (450 LBS/DAY)
RACK MOUNTED ON-SITE SODIUM
HYPOCHLORITE GENERATION SYSTEM
EQUIPMENT & PIPING LAYOUT

UNLESS OTHERWISE NOTED
TOLERANCES
TYPE: INCHES [MM]
FRACTIONS ± 1/8"
.X ± .1" ± 2.5
.XX ± .02" ± .51
.XXX ± .005" ± .127
ANGLES ± 1°


NOTICE OF CONFIDENTIALITY
THIS DOCUMENT CONTAINS PROPRIETARY INFORMATION THAT IS AND SHALL REMAIN THE PROPERTY OF SEVERN TRENT WATER PURIFICATION, INC. AND IS TO BE RETURNED IMMEDIATELY UPON REQUEST. ITS CONTENTS MAY NOT BE REPRODUCED, DISTRIBUTED, CIRCULATED, OR DISCLOSED TO THIRD PARTIES. RECIPIENT WILL NOT USE THIS INFORMATION FOR ANY PURPOSES WITHOUT PRIOR WRITTEN CONSENT OF SEVERN TRENT WATER PURIFICATION, INC.


| SCALE: | CLORTEC JOB No. | SIZE: | REV: |
|---|---|---|---|
| NTS | CP00060 | B | 3 |
| DWG No: CP00060-ML-00 | | SHEET: 2 OF 2 | |

| REV | DATE | DESCRIPTION | DRAWN BY | CHECKED BY | APPROVED BY |
|---|---|---|---|---|---|
| 0 | 4/16/08 | RELEASED FOR APPROVAL | JDP | JB | SM |
| 1 | 5/28/08 | UPDATED TO REVISED DESIGN | JAK | | |

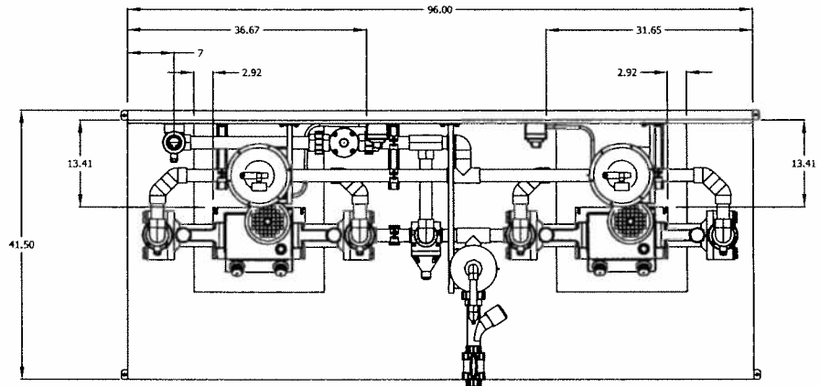


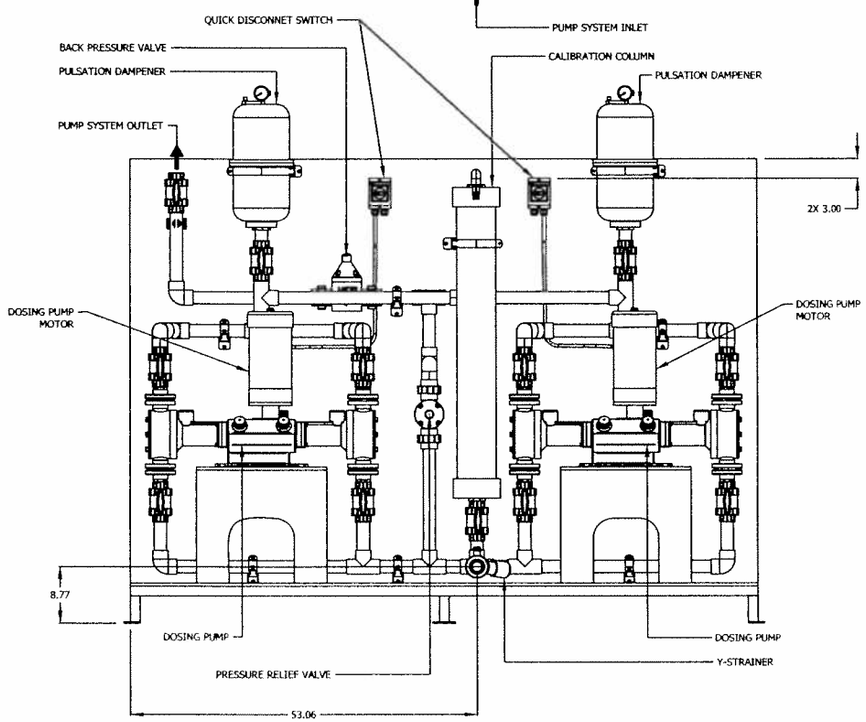


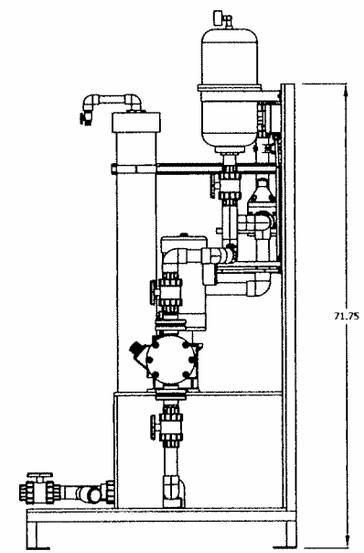


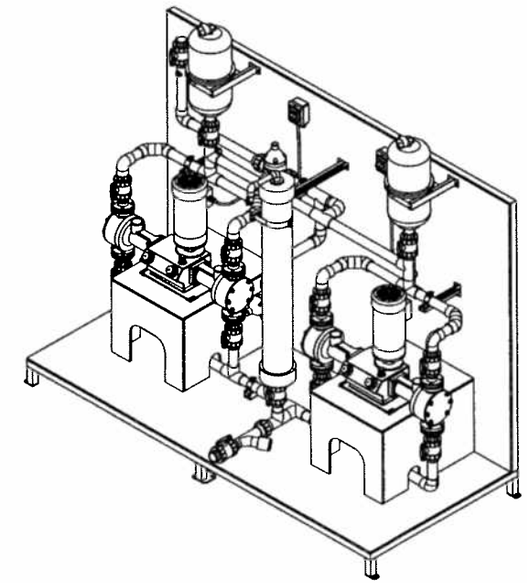

SEVERN TRENT SERVICES

CLORTEC

2660 COLUMBIA STREET TORRANCE, CALIFORNIA 90503
TELEPHONE No: (310)-618-9700 FAX No: (310)-618-1384
WEB SITE: www.severntrentservices.com

UNLESS OTHERWISE NOTED
TOLERANCES:

| TYPE: | INCHES | [MM] |
|---|---|---|
| FRACTIONS | ± 1/8" | |
| .X | ± .1" | ± 2.5 |
| .XX | ± .02" | ± .51 |
| .XXX | ± .005" | ± .127 |
| ANGLES | ± 1° | |

NOTICE OF CONFIDENTIALITY

THIS DOCUMENT CONTAINS PROPRIETARY INFORMATION THAT IS AND SHALL REMAIN THE PROPERTY OF SEVERN TRENT WATER PURIFICATION, INC. AND IS TO BE RETURNED IMMEDIATELY UPON REQUEST. ITS CONTENTS MAY NOT BE REPRODUCED, DISTRIBUTED, CIRCULATED, OR DISCLOSED TO THIRD PARTIES. RECIPIENT WILL NOT USE THIS INFORMATION FOR PURPOSES OTHER THAN INTENDED WITHOUT PRIOR WRITTEN CONSENT OF SEVERN TRENT WATER PURIFICATION, INC.

PROJECT: JEFFERSON PARISH
BRIDGE CITY, LA

TITLE: PUMP SKID ASSEMBLY
KM-257-770/2
488GPH, 1.5HP MOTOR, 460V, 3Ø

| SCALE: | CLORTEC JOB No: | SIZE: | REV: |
|---|---|---|---|
| NTS | CP00060 | B | 1 |

DWG No: PSA-PP-1-2-KM257770-2-B-GA-06

SHEET: 1 OF 1

| REV | DATE | DESCRIPTION | DRAWN BY | CHECKED BY | APPROVED BY |
|---|---|---|---|---|---|
| 0 | 04/22/08 | ISSUE FOR APPROVAL | CDM | | |

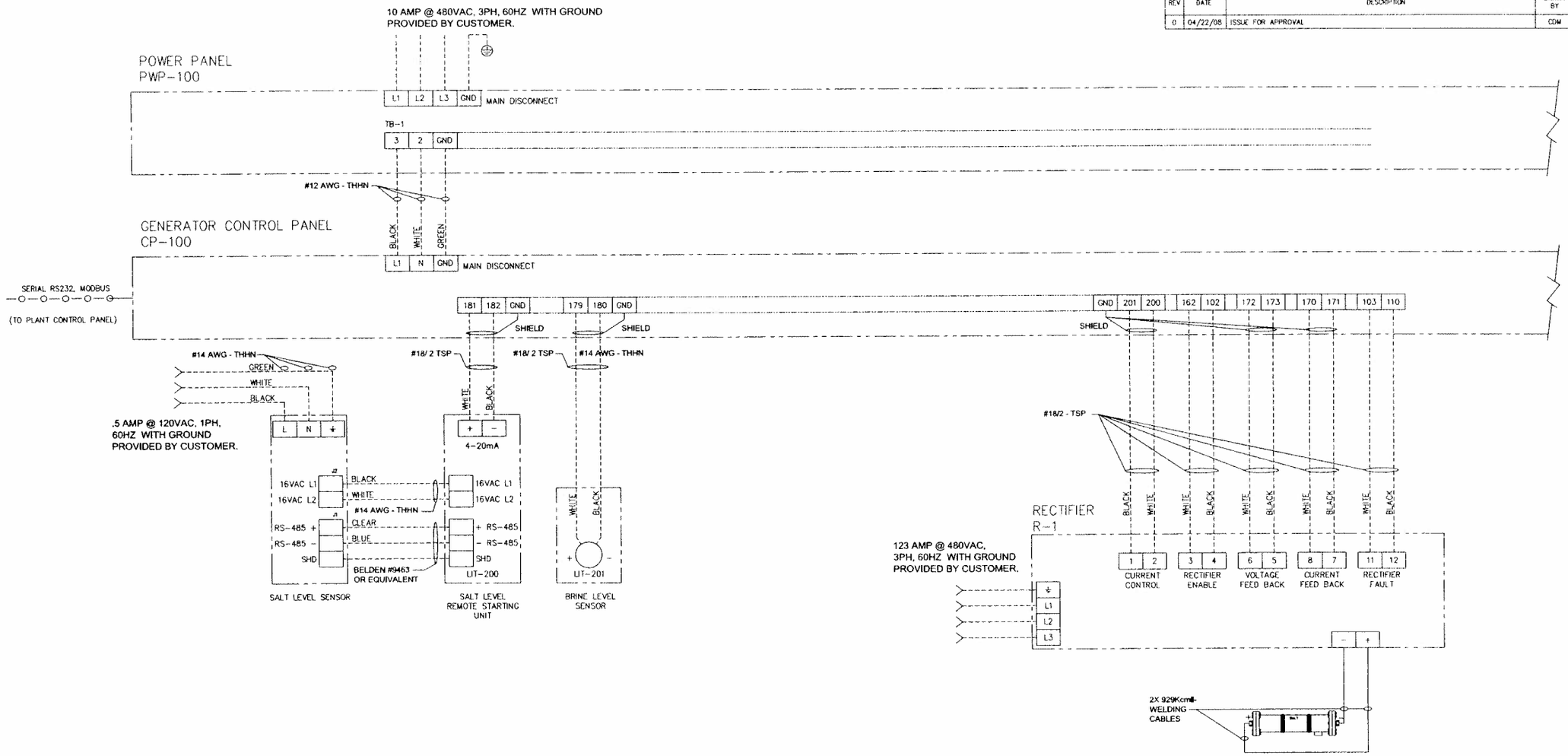


LEGENDS:

——————— INDICATES SHOP WIRING

- - - - - - - - - INDICATES FIELD WIRING

— — — — — INDICATES PHYSICAL SEPARATION FROM OTHER COMPONENTS (ENCLOSURE)

#xx/x TSP TWISTED PAIR CABLE W/ WIRE SIZES

(NO) NORMALLY OPEN — (NC) NORMALLY CLOSED

(C) COMMON — PRESSURE SWITCH (NO)

LEVEL SWITCH (NO) — LEVEL SWITCH (NC)

FLOW SWITCH (NO) — TEMPERATURE SWITCH (NC)

(SPL) INDICATES WIRE SPLICE POINTS — (MTR) MOTOR

[XXX] INDICATES TERMINAL POINTS — SOLENOID VALVE

* REFER TO MOTOR DATA PLATE FOR PROPER WIRING

SEVERN TRENT SERVICES **CLORTEC**


2660 COLUMBIA STREET TORRANCE, CALIFORNIA 90503
TELEPHONE No: (310)-618-9700 FAX No: (310)-618-1384
WEB SITE: www.severntrentservices.com


UNLESS OTHERWISE NOTED

| TOLERANCES: TYPE: | INCHES | [MM] |
|---|---|---|
| FRACTIONS | ± 1/8" | |
| .X | ± .1" | ± 2.5 |
| .XX | ± .01" | ± .51 |
| .XXX | ± .005" | ± .127 |
| ANGLES | ± 1° | |


NOTICE OF CONFIDENTIALITY

THIS DOCUMENT CONTAINS PROPRIETARY INFORMATION THAT IS AND SHALL REMAIN THE PROPERTY OF SEVERN TRENT WATER PURIFICATION, INC. AND IS TO BE RETURNED IMMEDIATELY UPON REQUEST. ITS CONTENTS MAY NOT BE REPRODUCED, DISTRIBUTED, CIRCULATED, OR DISCLOSED TO THIRD PARTIES. RECIPIENT WILL NOT USE THIS INFORMATION FOR ANY PURPOSES WITHOUT PRIOR WRITTEN CONSENT OF SEVERN TRENT WATER PURIFICATION, INC.


PROJECT: **BRIDGE CITY**
WTP

TITLE: FIELD WIRING DIAGRAM
CT-450 RACK

P/N: CP00060-ID-01

| SCALE: | CLORTEC JOB No: | SIZE: | REV: |
|---|---|---|---|
| NTS | CP00060 | B | 0 |

DWG No: CP00060-ID-01

SHEET: 1 OF 4

| REV | DATE | DESCRIPTION | DRAWN BY | CHECKED BY | APPROVED BY |
|---|---|---|---|---|---|
| 0 | 04/22/08 | ISSUE FOR APPROVAL | CDM | | |

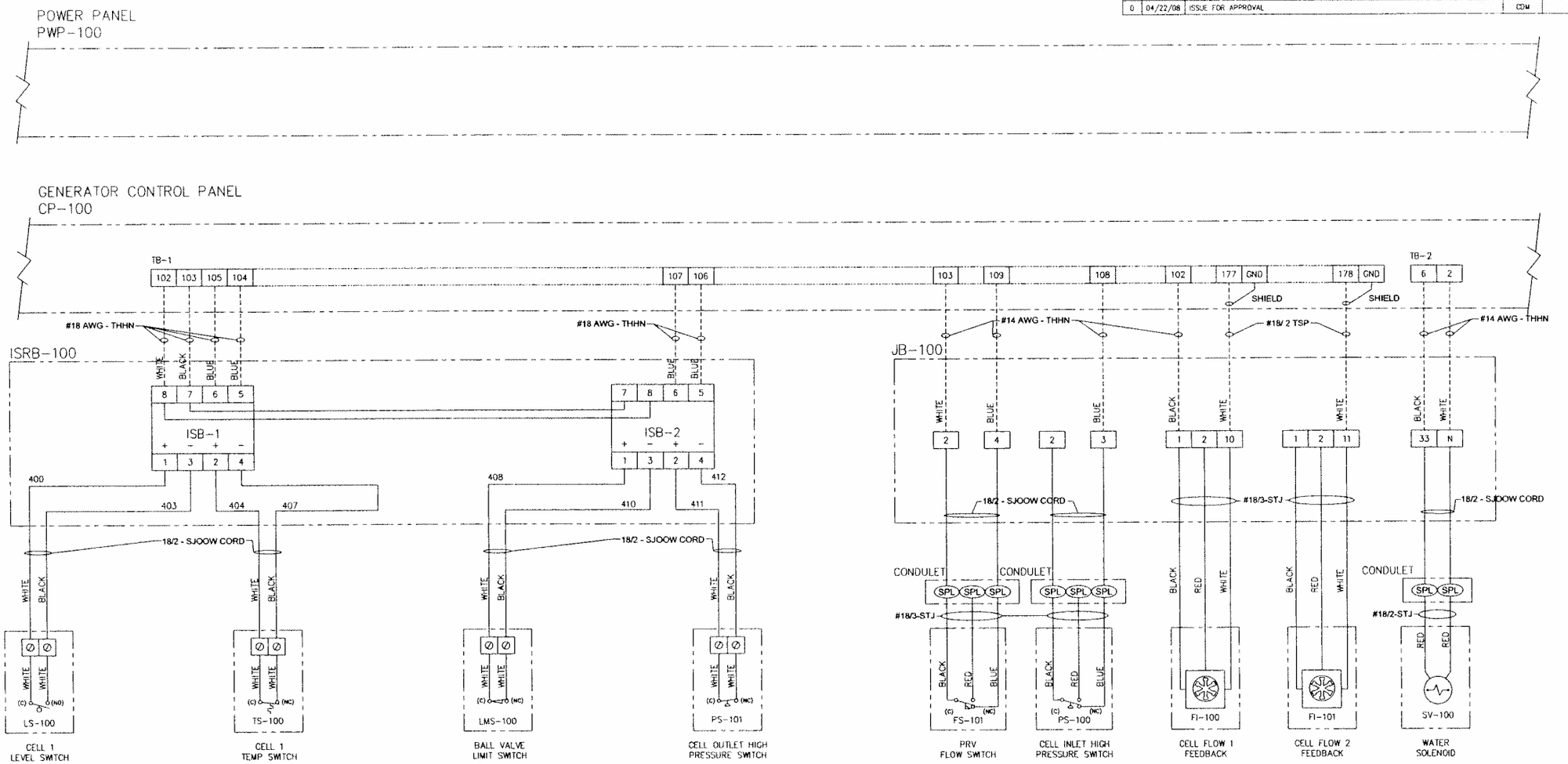


LEGENDS:

———————— INDICATES SHOP WIRING

- - - - - - - - - - INDICATES FIELD WIRING

—— — — —— INDICATES PHYSICAL SEPARATION FROM OTHER COMPONENTS (ENCLOSURE)

#xx/x TSP TWISTED PAIR CABLE W/ WIRE SIZES

(NO) NORMALLY OPEN

(NC) NORMALLY CLOSED

(C) COMMON

PRESSURE SWITCH (NO)

LEVEL SWITCH (NO)

LEVEL SWITCH (NC)

FLOW SWITCH (NO)

TEMPERATURE SWITCH (NC)

SPL INDICATES WIRE SPLICE POINTS

MTR MOTOR

XXX INDICATES TERMINAL POINTS

SOLENOID VALVE

* REFER TO MOTOR DATA PLATE FOR PROPER WIRING

SEVERN TRENT SERVICES

CLORTEC


2660 COLUMBIA STREET TORRANCE, CALIFORNIA 90503
TELEPHONE No: (310)-618-9700 FAX No: (310)-618-1384
WEB SITE: www.severntrentservices.com


UNLESS OTHERWISE NOTED

| TOLERANCES TYPE: | INCHES | [MM] |
|---|---|---|
| FRACTIONS | ± 1/8" | |
| .X | ± .1" | ± 2.5 |
| .XX | ± .01" | ± .51 |
| .XXX | ± .005" | ± .127 |
| ANGLES | ± 1° | |


NOTICE OF CONFIDENTIALITY

THIS DOCUMENT CONTAINS PROPRIETARY INFORMATION THAT IS AND SHALL REMAIN THE PROPERTY OF SEVERN TRENT WATER PURIFICATION, INC. AND IS TO BE RETURNED IMMEDIATELY UPON REQUEST. ITS CONTENTS MAY NOT BE REPRODUCED, DISTRIBUTED, CIRCULATED, OR DISCLOSED TO THIRD PARTIES. RECIPIENT WILL NOT USE THIS INFORMATION FOR ANY PURPOSES WITHOUT PRIOR WRITTEN CONSENT OF SEVERN TRENT WATER PURIFICATION, INC.


**BRIDGE CITY**
WTP

PROJECT:

TITLE: FIELD WIRING DIAGRAM
CT-450

P/N: CP00060-ID-01

| SCALE: | CLORTEC JOB No: | SIZE: | REV: |
|---|---|---|---|
| NTS | CP00060 | B | 0 |

DWG No: CP00060-ID-01

SHEET: 2 OF 4

| REV | DATE | DESCRIPTION | DRAWN BY | CHECKED BY | APPROVED BY |
|---|---|---|---|---|---|
| 0 | 04/22/08 | ISSUE FOR APPROVAL | CDM | | |

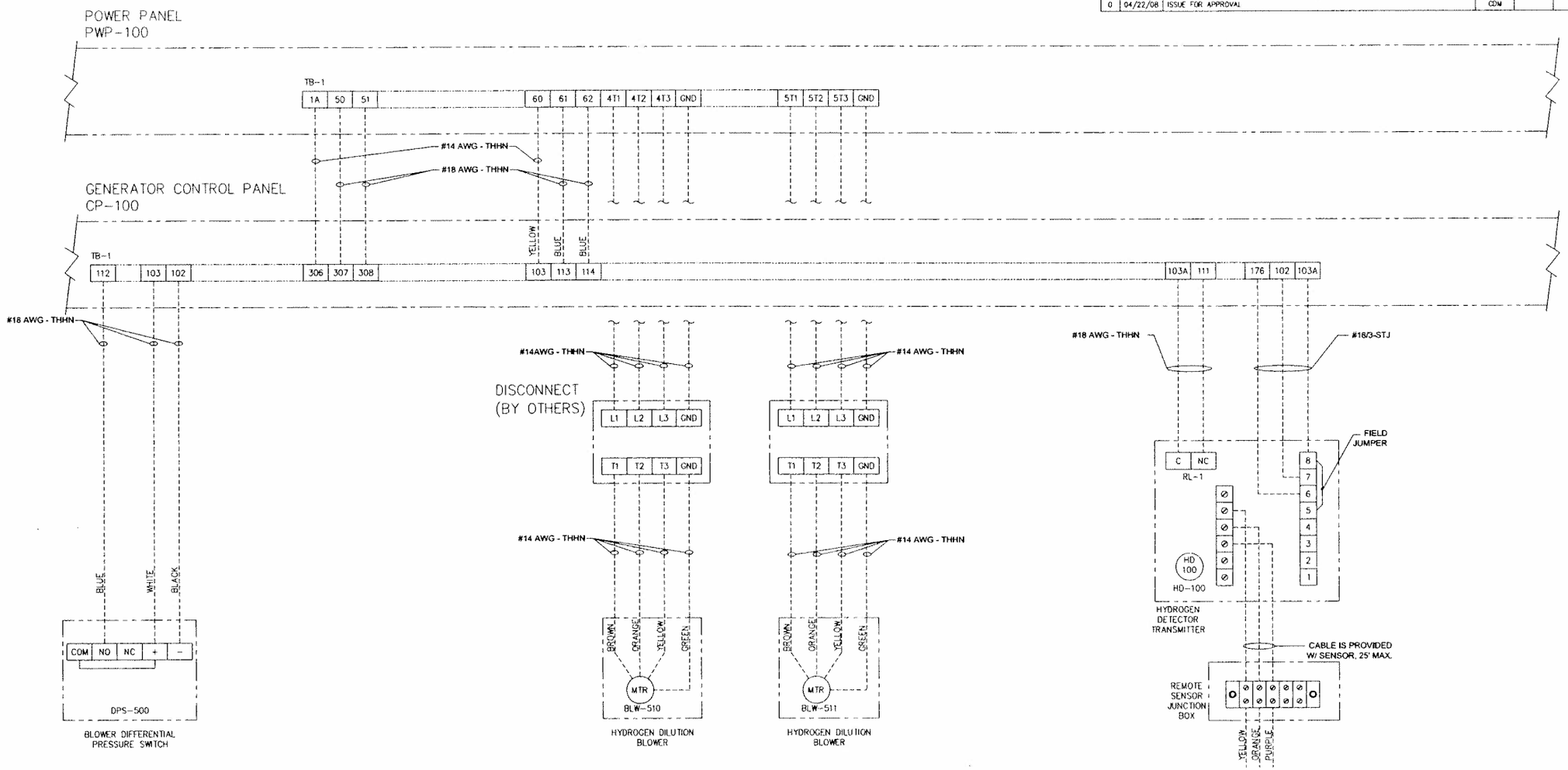


LEGENDS:

- INDICATES SHOP WIRING
- INDICATES FIELD WIRING
- INDICATES PHYSICAL SEPARATION FROM OTHER COMPONENTS (ENCLOSURE)
- #xx/x TSP TWISTED PAIR CABLE W/ WIRE SIZES
- (NO) NORMALLY OPEN
- (NC) NORMALLY CLOSED
- (C) COMMON
- PRESSURE SWITCH (NO)
- LEVEL SWITCH (NO)
- LEVEL SWITCH (NC)
- FLOW SWITCH (NO)
- TEMPERATURE SWITCH (NC)
- (SPL) INDICATES WIRE SPLICE POINTS
- (MTR) MOTOR
- [XXX] INDICATES TERMINAL POINTS
- SOLENOID VALVE
- * REFER TO MOTOR DATA PLATE FOR PROPER WIRING


SEVERN TRENT SERVICES
CLORTEC
2660 COLUMBIA STREET TORRANCE, CALIFORNIA 90503
TELEPHONE No: (310)-618-9700 FAX No: (310)-618-1384
WEB SITE: www.severntrentservices.com


UNLESS OTHERWISE NOTED

| TOLERANCES: TYPE: | INCHES | [MM] |
|---|---|---|
| FRACTIONS | ± 1/8" | |
| .X | ± .1" | ± 2.5 |
| .XX | ± .01" | ± .51 |
| .XXX | ± .005" | ± .127 |
| ANGLES | ± 1° | |


NOTICE OF CONFIDENTIALITY

THIS DOCUMENT CONTAINS PROPRIETARY INFORMATION THAT IS AND SHALL REMAIN THE PROPERTY OF SEVERN TRENT WATER PURIFICATION, INC. AND IS TO BE RETURNED IMMEDIATELY UPON REQUEST. ITS CONTENTS MAY NOT BE REPRODUCED, DISTRIBUTED, CIRCULATED, OR DISCLOSED TO THIRD PARTIES. RECIPIENT WILL NOT USE THIS INFORMATION FOR ANY PURPOSES WITHOUT PRIOR WRITTEN CONSENT OF SEVERN TRENT WATER PURIFICATION, INC.


**BRIDGE CITY**
WTP

PROJECT:

TITLE: FIELD WIRING DIAGRAM
CT-450

P/N: CP00060-ID-01

| SCALE: | CLORTEC JOB No: | SIZE: | REV: |
|---|---|---|---|
| NTS | CP00060 | B | 0 |

DWG No: CP00060-ID-01

SHEET: 3 OF 4

| REV | DATE | DESCRIPTION | DRAWN BY | CHECKED BY | APPROVED BY |
|---|---|---|---|---|---|
| 0 | 04/22/08 | ISSUE FOR APPROVAL | CDM | | |

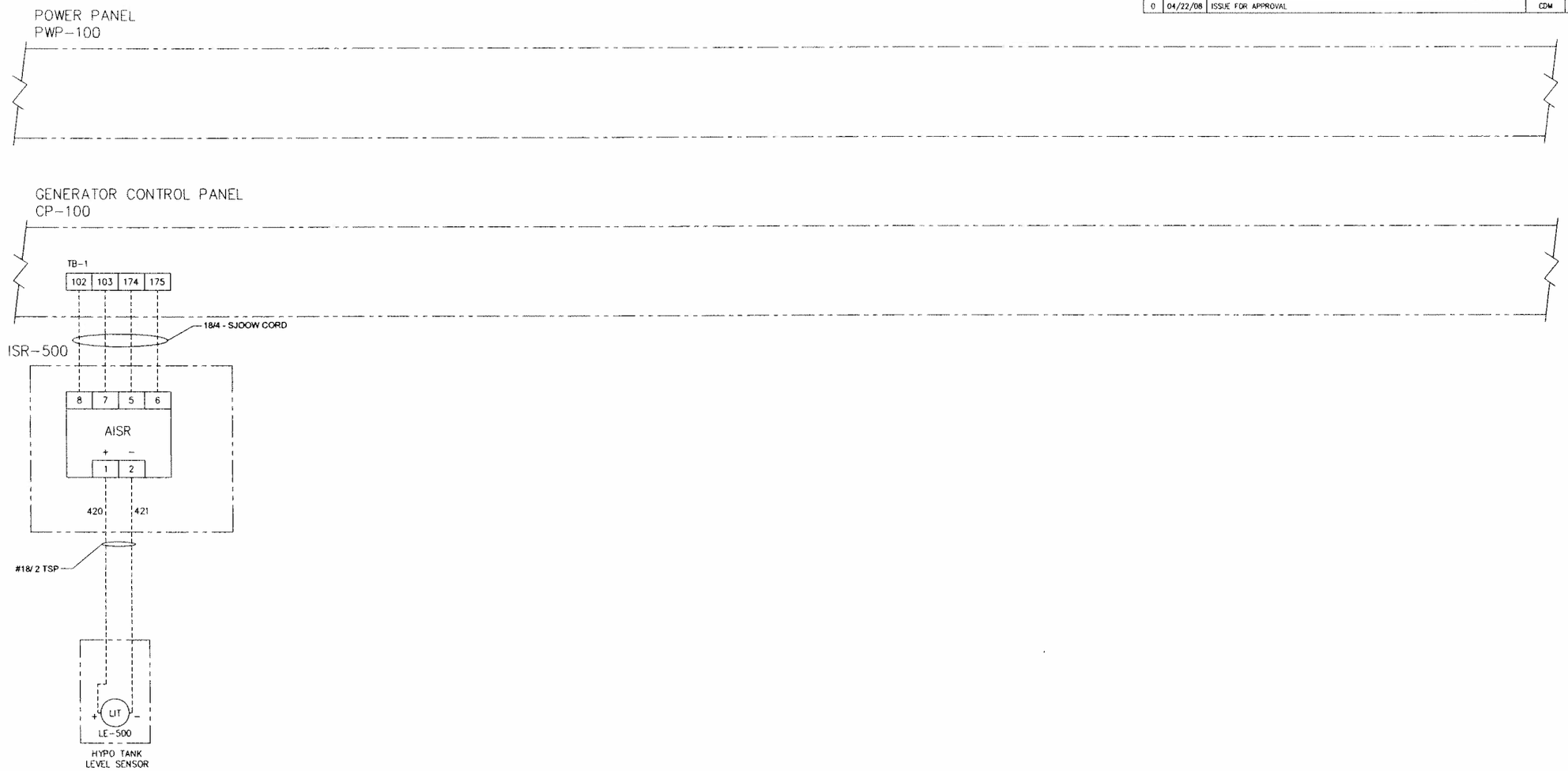


LEGENDS:

- INDICATES SHOP WIRING
- INDICATES FIELD WIRING
- INDICATES PHYSICAL SEPARATION FROM OTHER COMPONENTS (ENCLOSURE)
- #xx/x TSP TWISTED PAIR CABLE W/ WIRE SIZES
- (NO) NORMALLY OPEN
- (NC) NORMALLY CLOSED
- (C) COMMON
- PRESSURE SWITCH (NO)
- LEVEL SWITCH (NO)
- LEVEL SWITCH (NC)
- FLOW SWITCH (NO)
- TEMPERATURE SWITCH (NC)
- (SPL) INDICATES WIRE SPLICE POINTS
- (MTR) MOTOR
- [XXX] INDICATES TERMINAL POINTS
- SOLENOID VALVE
- * REFER TO MOTOR DATA PLATE FOR PROPER WIRING


SEVERN TRENT SERVICES
CLORTEC
2660 COLUMBIA STREET TORRANCE, CALIFORNIA 90503
TELEPHONE No. (310)-618-9700 FAX No. (310)-618-1.584
WEB SITE: www.severntrentservices.com


UNLESS OTHERWISE NOTED
TOLERANCES

| TYPE: | INCHES | (MM) |
|---|---|---|
| FRACTIONS | ± 1/8" | |
| .X | ± .1" | ± 2.5 |
| .XX | ± .01" | ± .51 |
| .XXX | ± .005" | ± .127 |
| ANGLES | ± 1° | |


NOTICE OF CONFIDENTIALITY

THIS DOCUMENT CONTAINS PROPRIETARY INFORMATION THAT IS AND SHALL REMAIN THE PROPERTY OF SEVERN TRENT WATER PURIFICATION, INC. AND IS TO BE RETURNED IMMEDIATELY UPON REQUEST. ITS CONTENTS MAY NOT BE REPRODUCED, DISTRIBUTED, CIRCULATED, OR DISCLOSED TO THIRD PARTIES. RECIPIENT WILL NOT USE THIS INFORMATION FOR ANY PURPOSES WITHOUT PRIOR WRITTEN CONSENT OF SEVERN TRENT WATER PURIFICATION, INC.


PROJECT: BRIDGE CITY WTP

TITLE: FIELD WIRING DIAGRAM CT-450

P/N: CP00060-ID-01

| SCALE: | CLORTEC JOB No: | SIZE: | REV: |
|---|---|---|---|
| NTS | CP00060 | B | 0 |

DWG No: CP00060-ID-01

SHEET: 4 OF 4

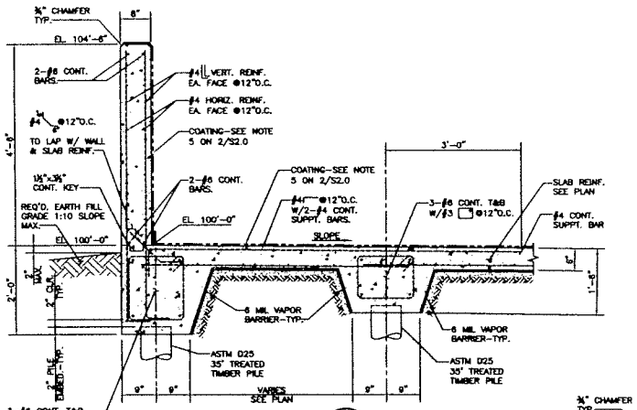


SECTION 1
SCALE: ¾"=1'-0" S2.0

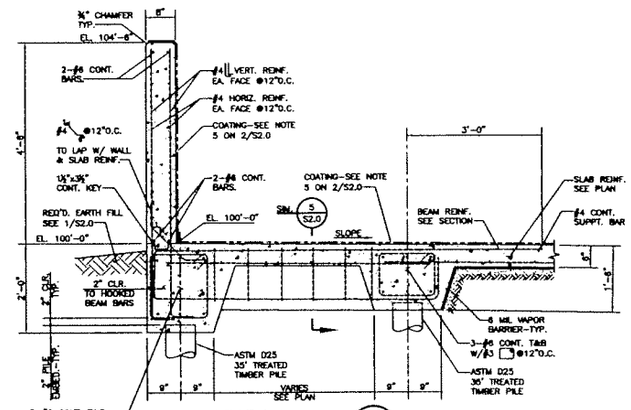


SECTION 2
SCALE: ¾"=1'-0" S2.0

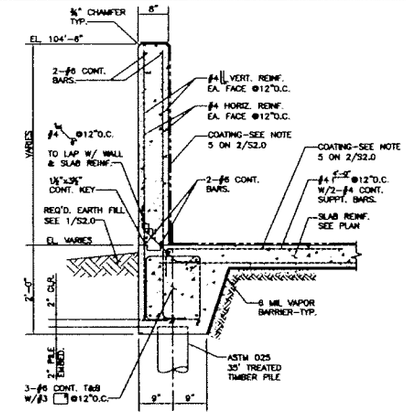


SECTION 3
SCALE: ¾"=1'-0" S2.0

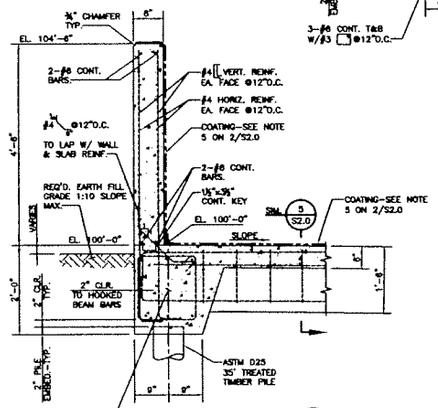


SECTION 4
SCALE: ¾"=1'-0" S2.0

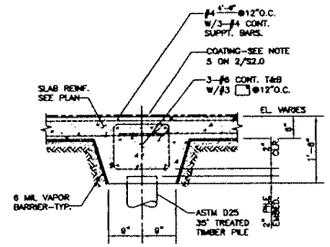


SECTION 5
SCALE: ¾"=1'-0" S2.0

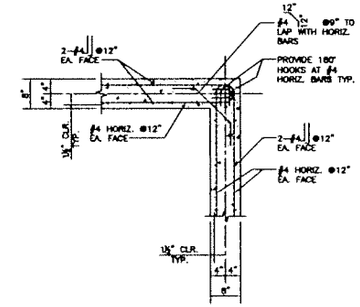


PLAN DETAIL – TYP. WALL CORNER
SCALE: ¾"=1'-0" S2.0

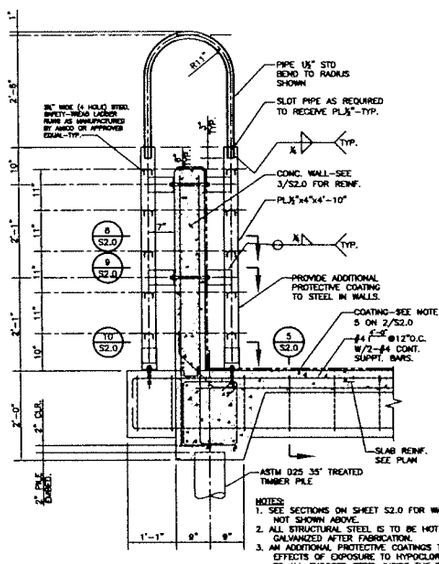


NOTES:
1. SEE SECTIONS ON SHEET S2.0 FOR WALL DETAILS NOT SHOWN ABOVE.
2. ALL STRUCTURAL STEEL IS TO BE HOT-DIPPED GALVANIZED AFTER FABRICATION.
3. AN ADDITIONAL PROTECTIVE COATINGS TO RESIST THE EFFECTS OF EXPOSURE TO HYPOCLORITE IS TO BE APPLIED TO ALL EXPOSED STEEL INSIDE THE TANK ENCLOSURE.

SECTION AT LADDER
SCALE: ¾"=1'-0" S2.0

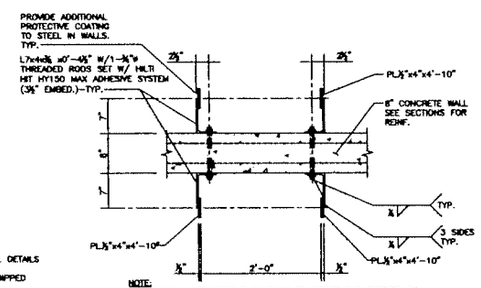


NOTE:
AN ADDITIONAL PROTECTIVE COATINGS TO RESIST THE EFFECTS OF EXPOSURE TO HYPOCLORITE IS TO BE APPLIED TO ALL EXPOSED STEEL INSIDE THE TANK ENCLOSURE.

PLAN DETAIL
SCALE: 1"=1'-0" S2.0

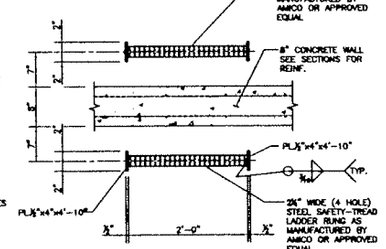


NOTES:
1. AN ADDITIONAL PROTECTIVE COATINGS TO RESIST THE EFFECTS OF EXPOSURE TO HYPOCLORITE IS TO BE APPLIED TO ALL EXPOSED STEEL INSIDE THE TANK ENCLOSURE.

PLAN DETAIL
SCALE: 1"=1'-0" S2.0

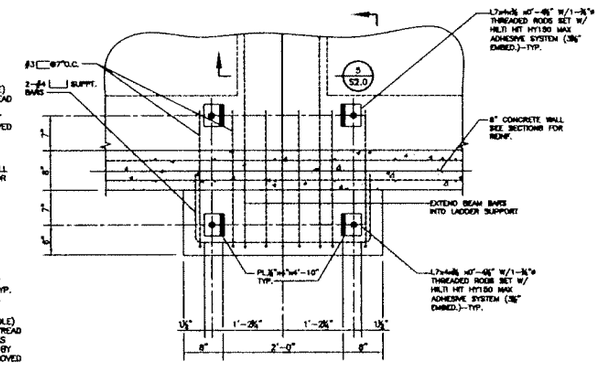


NOTE:
LADDER IS TO BE CENTERED ON A CONCRETE BEAM.

PLAN DETAIL
SCALE: 1"=1'-0" S2.0

PERRIN & CARTER, INC.
ENGINEERS, ARCHITECTS, & PLANNERS
3501 Ridgelake Dr., Metairie, La 70002

JEFFERSON PARISH DEPARTMENT OF SEWAGE
BRIDGE CITY WASTEWATER TREATMENT PLANT
HYPOCLORITE TANK AND CONTAINMENT

| REV. | DATE | DESCRIPTION | BY |
|---|---|---|---|

© 2010 PERRIN & CARTER, INC. ALL RIGHTS RESERVED

DATE: 01/27/10
DRAWN BY: KJH
CHECKED BY: MAC
FILE NAME: 06012_S2.0

SHEET TITLE:
SECTIONS

PROJECT NO.:
06012

DWG. NO.:
S2.0

SHEET OF

# GENERAL NOTES (1 / S1.0)

## 1 GENERAL

STRUCTURAL DRAWINGS SHALL BE USED IN CONJUNCTION WITH JOB SPECIFICATIONS, MECHANICAL, ELECTRICAL, PLUMBING AND SITE DRAWINGS. CONSULT THESE DRAWINGS FOR DETAILS NOT SHOWN ON STRUCTURAL DRAWINGS. CONFLICTS BETWEEN DRAWINGS, SPECIFICATIONS, EXISTING CONDITIONS, ETC. SHALL BE BROUGHT TO THE ATTENTION OF THE PROJECT ENGINEER FOR RESOLUTION PRIOR TO PROCEEDING WITH AFFECTED WORK.

ALL DIMENSIONS AND CONDITIONS MUST BE VERIFIED IN THE FIELD. ANY DISCREPANCIES BROUGHT TO THE ATTENTION OF THE ENGINEER BEFORE PROCEEDING WITH THE AFFECTED PART OF WORK.

IT IS THE CONTRACTOR'S SOLE RESPONSIBILITY TO DETERMINE ERECTION PROCEDURES AND SEQUENCE TO INSURE THE STABILITY OF THE BUILDING AND IT'S COMPONENTS DURING ERECTION, THIS INCLUDES THE ADDITION OF NECESSARY SHORING, SHEETING & TEMPORARY BRACING. IT SHALL ALSO BE THE CONTRACTOR'S SOLE RESPONSIBILITY TO PROTECT ADJACENT STRUCTURES, EXISTING UTILITIES, ETC. FROM DAMAGE DURING CONSTRUCTION.

NO PENETRATIONS NOT SHOWN ON CONTRACT DRAWINGS OR APPROVED SHOP DRAWINGS SHALL BE MADE IN ANY FOUNDATION MEMBER, FLOOR SLAB, GRADE BEAM, ETC. WITHOUT THE EXPRESS WRITTEN APPROVAL OF THE STRUCTURAL ENGINEER.

## 2 EXISTING CONDITIONS

ALL DIMENSIONS AND CONDITIONS TYING INTO OR GOVERNED BY EXISTING CONSTRUCTION CONDITIONS ARE APPROXIMATE AND ARE NOT ASSERTED TO BE CORRECT. ALL SUCH DIMENSIONS AND CONDITIONS SHALL BE VERIFIED IN THE FIELD BY THE CONTRACTOR PRIOR TO THE PREPARATION OF SHOP DRAWINGS. THE FIRST SUBMITTAL OF SHOP DRAWINGS MUST CONTAIN CORRECT CONDITIONS AND DIMENSIONS OBTAINED FROM FIELD OBSERVATIONS AND MEASUREMENTS. IF CONDITIONS AND/OR DIMENSIONS VARY GREATLY FROM THOSE SHOWN, THE CONTRACTOR SHALL NOTIFY THE ENGINEER PRIOR TO THE PREPARATION OF SHOP DRAWINGS.

## 3 DAMAGE TO EXISTING CONSTRUCTION

ALL WORK SHALL BE DONE IS A MANNER THAT WILL NOT DAMAGE THE EXISTING CONSTRUCTION THAT IS TO REMAIN.

## 4 FOUNDATION

THE FOUNDATION OF THIS BUILDING IS TO CONSIST OF A DEEP FOUNDATION ACHIEVED BY DRIVEN TREATED-TIMBER PILES. ALL DRIVEN PILE WORK SHALL BE PERFORMED IN CONFORMANCE WITH SPECIFICATION 02455, DRIVEN PILES. SEE THIS SPECIFICATION FOR ADDITIONAL INFORMATION NOT GIVEN BELOW.

PILE TYPE
ALL PILES SHALL BE TREATED TIMBER PILES CONFORMING TO ASTM SPECIFICATION D-25 OF THE LATEST REVISION. PILES SHALL BE DRIVEN TO A TIP ELEVATION OF 35' BELOW FIRST FLOOR ELEVATION AND HAVE A MINIMUM TIP DIAMETER OF 6" & A MINIMUM BUTT DIAMETER OF 8" AS MEASURED 3 FEET FROM THE END. ALLOW 1'-0" FOR CUT-OFF. PILES SHALL BE PINE OR DOUGLAS FIR, CLEAN OR ROUGH PEELED. PILES SHALL BE TREATED WITH CHROMATED COPPER ARSENATE (CCA) TO 0.60 LB. PER CU. FT. RETENTION IN ACCORDANCANCE WITH A.W.P.A. SPECIFICATIONS. BRUSH TREAT TOP OF PILE CUT-OFF WITH COPPER NAPTHENATE CONFORMING TO A.W.P.A. SPECIFICATION M4.

PILE INSTALLATION
PILES ARE TO BE DRIVEN WITH A VULCAN NO. 2 HAMMER, OR A SINGLE-ACTING DROP HAMMER DELIVERING 7200 FT.-LBS. OF ENERGY PER BLOW. PILES MAY BE FOLLOWED. PILES ARE TO BE DRIVEN AT A RATE THAT IS NOT TO EXCEED 12 BLOWS PER FOOT OF PENETRATION. PEAK PARTICLE VELOCITY DURING DRIVING SHALL NOT EXCEED 0.25 INCH.

PILE DESIGN CAPACITY
DESIGN CAPACITY OF THIS PILE IS FIVE (5) TONS IN COMPRESSION, AS ESTABLISHED BY THE PARISH OF JEFFERSON AMENDENTS TO THE ADOPTED INTERNATIONAL CODES.

TESTING & QUALITY ASSURANCE:
AS A MINIMUM, THE INSPECTION SERVICE SHALL INSPECT ALL PILES; LOG DRIVING OF EACH PILE FOR FULL LENGTH, RECORD ACTUAL TIP, BUTT, AND LENGTH DIMENSIONS OF EACH PILE; INSPECT AND TEST CONCRETE SAME AS REQUIRED IN GENERAL NOTE 3. SEE SPECIFICATIONS SECTION 02455 FOR ADDITIONAL REQUIREMENTS.

## 5 CONCRETE

ALL CONCRETE, FORM WORK, AND CONCRETE REINFORCING SHALL BE IN CONFORMANCE WITH SPECIFICATION 03300.

ALL STRUCTURAL CONCRETE, FOR FOUNDATIONS, SLABS AT GRADE, WALLS, PADS, ETC. SHALL BE A READY-MIX CONCRETE. CONCRETE MIX SHALL BE OF STANDARD WEIGHT AGGREGATES ABLE TO ACHIEVE A 28 DAY STRENGTH OF 4000 PSI. THE MIX DESIGN SHALL BE SUBMITTED TO A RECOGNIZED TESTING LABORATORY FOR APPROVAL. PROPOSED MIX DESIGN SHALL BE UNIQUELY IDENTIFIED BY MIX NUMBER OR OTHER POSITIVE MEANS. MIX DESIGN AND VERIFYING TEST REPORTS SHALL BE SUBMITTED 5 DAYS PRIOR TO USE. CALCIUM CHLORIDES SHALL NOT BE UTILIZED. OTHER ADMIXTURES MAY ONLY BE UTILIZED WITH THE APPROVAL OF THE STRUCTURAL ENGINEER.

ALL CONCRETE WORK SHALL COMPLY WITH ALL THE REQUIREMENTS OF ASTM STANDARD C94 FOR THE MEASURING, MIXING, TRANSPORTING, ETC. CONCRETE TICKETS SHALL BE TIME STAMPED WHICH THE CONCRETE IS BATCHED. THE MAXIMUM TIME ALLOWED FROM THE TIME MIXING WATER IS ADDED TO THE TIME THE CONCRETE IS DEPOSITED, SHALL NOT EXCEED ONE AND ONE HALF HOURS. IT SHALL BE THE DUTY OF THE TESTING LAB TO NOTIFY THE OWNER'S REPRESENTATIVE AND THE CONTRACTOR OF ANY NONCOMPLIANCE WITH THE ABOVE.

NO HORIZONTAL JOINTS SHALL BE PERMITTED. VERTICAL CONSTRUCTION JOINTS IN CONCRETE SHALL BE LOCATED AT MID-SPAN. A POUR SEQUENCE SHALL BE SUBMITTED FOR REVIEW.

A STANDARD HOOK SHALL BE PROVIDE AT THE TERMINATION OF ALL BEAM TOP REINFORCING BARS. CORNER BARS WITH FULL TENSION LAPS, MATCHING CONTINUOUS BAR SIZE AND SPACING SHALL BE PROVIDED FOR ALL HORIZONTAL BEAM BARS.

STANDARD LAP SPLICE LENGTHS ARE AS FOLLOWS:

| BAR SIZE | LAP LENGTH TOP BARS | LAP LENGTH OTHER BARS |
|---|---|---|
| #3 | 24" | 18" |
| #4 | 32" | 25" |
| #5 | 40" | 31" |
| #6 | 48" | 37" |

REINFORCING STEEL SHALL BE OF ASTM A615 GRADE 60 DEFORMED BARS, FREE FROM OIL, SCALE AND RUST. REINFORCING SHALL BE FABRICATED AND PLACED IN ACCORDANCE WITH THE TYPICAL BENDING DIAGRAM & PLACING DETAILS OF ACI STANDARDS & SPECIFICATIONS OF THE LATEST REVISIONS.

REINFORCING SHALL BE SECURED IN PLACE BY THE USE OF METAL TIES AND SUPPORTED BY METAL, BOLSTERS, CHAIRS, SPACERS AND OTHER DEVICES. SUPPORTS FOR ELEVATED SLABS SHALL HAVE LEGS PROTECTED WITH PLASTIC.

## 5 CONCRETE (CONTINUED)

REINFORCEMENT IS TO BE PLACED WITH THE MINIMUM FOLLOWING CLEARANCES:
SLABS: 1¼" CLEAR BOTTOM, 1½" CLEAR TOP.
WALLS: 1½" CLEAR TYP.
BEAMS: 3" CLEAR BOTTOM EARTH FORMED, 3" CLEAR SIDES EARTH FORMED, 1½" CLEAR TO STIRRUPS SIDES BOARD FORMED, 2" CLEAR TO LONGITUDINAL REINFORCEMENT SIDES BOARD FORMED, 1½" CLEAR TOP.

ALL VERTICAL FACES OF CONCRETE ARE TO BE FORMED WITH A BOARD.

ALL MECHANICAL SPLICES SHALL COMPLY WITH ACI 318-02 REQUIREMENTS. BAR ENDS MUST BE TAPER THREADED WITH COUPLER MANUFACTURE'S BAR THREADER TO ENSURE PROPER TAPER AND THREAD ENGAGEMENT. BARS SHALL BE TIGHTENED TO THE MANUFACTURER'S RECOMMENDED WRENCH SETTING. MECHANICAL THREADED BAR SPLICES SHALL BE AS MANUFACTURED BY ERICO CONCRETE PRODUCTS OR AS APPROVED BY THE STRUCTURAL ENGINEER.

PROVIDE A 6 MIL POLYETHYLENE VAPOR BARRIER ON TOP OF FILL UNDER ALL INTERIOR SLABS AND BEAMS. OMIT ON TOP OF PILES.

CONCRETE TESTING SERVICES SHALL BE PROVIDED & PAID FOR BY THE OWNER.

DESIGN, ERECTION AND REMOVAL OF ALL FORM WORK, SHALL MEET THE REQUIREMENTS SET FORTH IN ACI STANDARDS 347 AND 301.

## 6 STRUCTURAL STEEL

GENERAL:
ALL STEEL, THAT IS NOT FIREPROOFED, SHALL RECEIVE A RUST PREVENTATIVE PRIMER COATING. ALL FABRICATION AND ERECTION SHALL CONFORM TO THE AISC CODE OF STANDARD PRACTICE OF THE LATEST REVISION.

STRUCTURAL STEEL SHAPES:
THE FOLLOWING STRUCTURAL STEEL SHAPES ARE TO CONFORM TO THE RESPECTIVE ASTM UNLESS OTHERWISE SPECIFICALLY INDICATED ELSEWHERE:

| | |
|---|---|
| STEEL PIPE | ASTM A53 |
| OTHER STRUCTURAL SHAPES | ASTM A36 |
| STEEL PLATES | ASTM A36 |

ALL STRUCTURAL STEEL SHAPES, PLATES, AND ALL MISCELLANEOUS METAL ITEMS AND CONNECTORS SHALL BE HOT-DIP GALVANIZED AFTER FABRICATION. ALL STRUCTURAL STEEL INDICATED TO BE HOT-DIP GALVANIZED ON CONSTRUCTION DOCUMENTS IS TO BE DONE IN ACCORDANCE WITH ASTM A123 AFTER FABRICATION, INCLUDING ALL SHOP WELDING AND DRILLING HAS BEEN COMPLETED. ALL DAMAGED COATING, INCLUDING DAMAGE DUE TO WELDING, IS TO BE REPAIRED IN ACCORDANCE WITH ASTM A780. WHEREVER MEMBERS ARE IN CONTACT WITH EACH OTHER AND A STRENGTH WELD IS NOT REQUIRED, THE JOINT SHALL BE SEALED WITH A MINIMUM ⅛" FILLET WELD.

CONNECTIONS:
THE FOLLOWING STRUCTURAL STEEL CONNECTION ELEMENTS ARE TO CONFORM TO THE RESPECTIVE SPECIFICATION UNLESS OTHERWISE SPECIFICALLY INDICATED ELSEWHERE:

| | |
|---|---|
| BOLTS | ASTM A325 OR ASTM F1852, TYPE 1 |
| THREADED RODS | ASTM A193, B7 |
| ANCHOR RODS | ASTM F1554, GRADE 36 |
| NUTS | ASTM A563, HEAVY HEX GRADE DH |
| WASHERS | ASTM F436, GRADE 1 |
| WELDS | AWS/ANSI D1.1 |

ALL FIELD BOLTED CONNECTIONS SHALL CONFORM TO ASTM A325 AND BE ¾" (MIN.) DIAMETER U.N.O. ALL WELDED CONNECTIONS SHALL HAVE A MINIMUM ⅜" FILLET WELD UNLESS OTHERWISE NOTED. ALL WELDS SHALL BE MADE WITH E-70 ELECTRODES.

ALL FASTENERS JOINING HOT-DIP GALVANIZED STRUCTURAL ELEMENTS, INCLUDING BUT NOT LIMITED TO BOLTS, ANCHOR RODS, NUTS, WASHERS, & EMBEDDED PLATES, ARE TO BE HOT-DIP GALVANIZED IN ACCORDANCE WITH ASTM A153. ALL DAMAGED COATING DUE TO WELDS IS TO BE REPAIRED IN ACCORDANCE WITH ASTM A780.

TESTING & QUALITY ASSURANCE:
AS A MINIMUM, THE INSPECTION SERVICE SHALL REVIEW THE WELDER'S QUALIFICATIONS AND CHECK ALL STRUCTURAL STEEL CONNECTIONS IN THE FIELD.

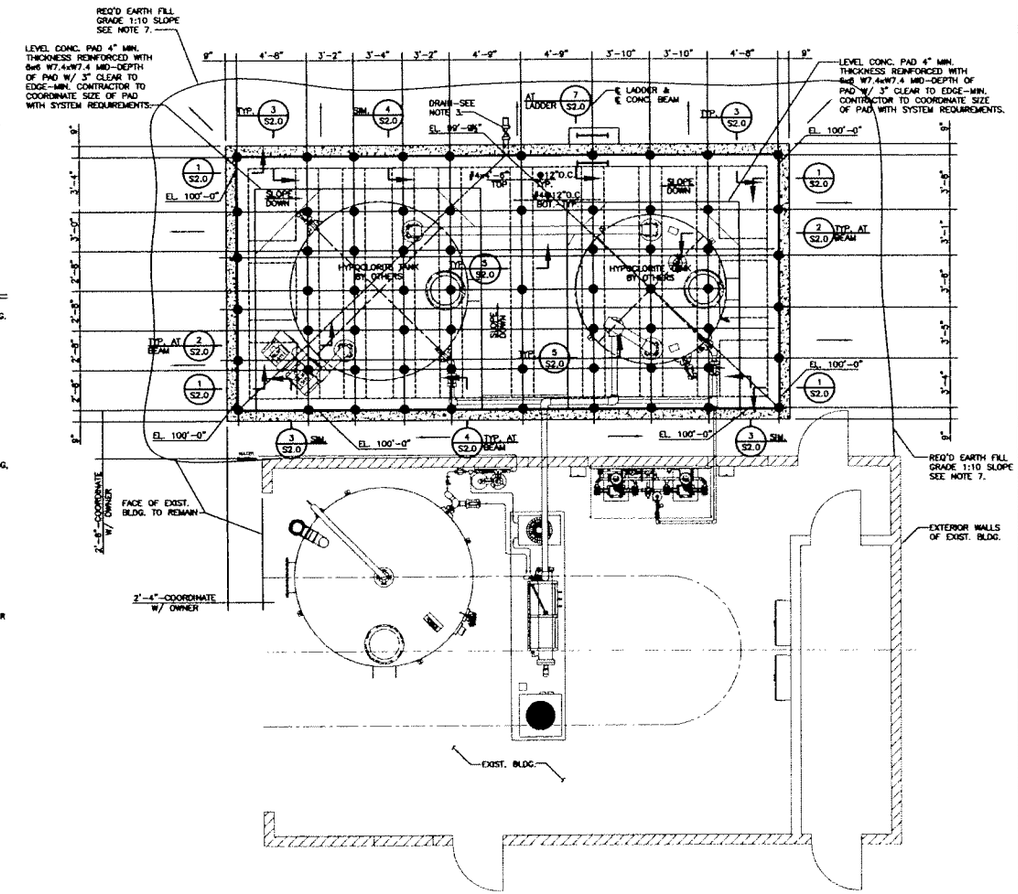


PLAN NOTES: UNLESS NOTED OTHERWISE
1. TOP OF CONCRETE SLAB AT EL. VARIES-SEE PLAN. ELEVATION 100'-0" IS TO MATCH HIGHEST FINISH FLOOR ELEVATION OF EXISTING ADJACENT BUILDING.
2. 8" CONCRETE SLAB THROUGHOUT. SEE PLAN FOR MAIN REINFORCEMENT. SEE SECTIONS AND DETAILS FOR ADDITIONAL REINFORCEMENT. PROVIDE #3 @ 12" O.C. TEMPERATURE AND SHRINKAGE REINFORCEMENT PERPENDICULAR TO AND ON TOP OF MAIN BOTTOM REINFORCEMENT.
3. 4"ø PVC DRAIN WITH 4"ø VALVE. VALVE SHALL BE ASAHI TYPE 56 BUTTERFLY VALVE WITH PVC BODY AND DISC AND EPDM SEAT AND O-RINGS (LEVER OPERATED) OR APPROVED EQUAL.
4. ALL UNDERGROUND UTILITIES AND PIPING IS TO BE LOCATED, UNEARTHED, AND EXPOSED PRIOR TO PERFORMING ANY MODIFICATIONS TO THE SITE.
5. THE COATING SYSTEM USED FOR THE INTERIOR OF THIS CONTAINMENT TANK SHALL BE ARC 791V QUARTZ REINFORCED COMPOSITE SYSTEM AS MANUFACTURED BY A.W. CHESTERTON COMPANY, OR AN APPROVED EQUAL. FOLLOW ALL MANUFACTURERS INSTALLATION PROCEDURES AND RECOMMENDATIONS.
6. COORDINATE LOCATION AND SIZE OF ALL OPENINGS THROUGH WALL BY OTHERS. OPENINGS SMALLER THAN 6", AND SPACED MORE THAN 2'-0" APART MAY BE MADE WITHOUT ALTERATION TO THE REINFORCEMENT.
7. ——— INDICATES DIRECTION OF SLOPE FOR REQUIRED EARTH FILL AROUND PERIMETER OF CONCRETE STRUCTURE. GRADE AT 1:10 SLOPE MAXIMUM.

FOUNDATION FRAMING PLAN (2 / S1.0)
TANK CONTAINMENT SCALE: ¼"=1'-0"

N


PERRIN & CARTER, INC.
ENGINEERS, ARCHITECTS, & PLANNERS
3501 Ridgelake Dr., Metairie, La 70002


JEFFERSON PARISH DEPARTMENT OF SEWAGE
BRIDGE CITY WASTEWATER TREATMENT PLANT
HYPOCLORITE TANK AND CONTAINMENT

| REV. | DATE | DESCRIPTION | BY |
|---|---|---|---|

© 2010 PERRIN & CARTER, INC. ALL RIGHTS RESERVED

DATE: 01/27/10
DRAWN BY: KJH
CHECKED BY: MAC
FILE NAME: 06012_S1.0

SHEET TITLE:
GENERAL NOTES, & TANK RAMING PLAN
PROJECT NO.:
06012
DWG. NO.:
S1.0
SHEET OF

| REV | DATE | DESCRIPTION | DRAWN BY | CHECKED BY | APPROVED BY |
|---|---|---|---|---|---|
| 0 | 4-30-08 | ISSUED FOR APPROVAL | SM | | |
| 1 | 5-27-08 | ADDED EXISTING TANK, REVISED TANK INLET | SM | | |

# BRIDGE CITY

## JEFFERSON PARISH, LA

## CT-450 (450 lbs/Day) RACK MOUNTED

## ON-SITE SODIUM HYPOCHLORITE GENERATION SYSTEM

## PIPING & INSTRUMENTATION DIAGRAM


SEVERN TRENT SERVICES

CLORTEC

2650 Columbia Street Torrance, Ca. 90503

TELEPHONE No: (310) 533-5849 E-MAIL:

FAX No: (310) 618-1384 WEB SITE: www.severntrentservices.com


UNLESS OTHERWISE NOTED

TOLERANCES:

| TYPE: | INCHES | [MM] |
|---|---|---|
| FRACTIONS | ± 1/8" | |
| .X | ± .1" | ± 2.5 |
| .XX | ± .02" | ± .51 |
| .XXX | ± .005" | ± .127 |
| ANGLES | ± 1° | |


NOTICE OF CONFIDENTIALITY

THIS DOCUMENT CONTAINS PROPRIETARY INFORMATION THAT IS AND SHALL REMAIN THE PROPERTY OF SEVERN TRENT WATER PURIFICATION, INC. AND IS TO BE RETURNED IMMEDIATELY UPON REQUEST. ITS CONTENTS MAY NOT BE REPRODUCED, DISTRIBUTED, CIRCULATED, OR DISCLOSED TO THIRD PARTIES. RECIPIENT WILL NOT USE THIS INFORMATION FOR ANY PURPOSES WITHOUT PRIOR WRITTEN CONSENT OF SEVERN TRENT WATER PURIFICATION, INC.


**BRIDGE CITY**
JEFFERSON PARISH, LA

**CT-450 (450 LBS/DAY)**
RACK MOUNTED ON-SITE SODIUM HYPOCHLORITE GENERATION SYSTEM
PIPING AND INSTRUMENTATION DIAGRAM

| SCALE: | CLORTEC JOB No: | SIZE: | REV: |
|---|---|---|---|
| NTS | CP00060 | B | 1 |

DWG No: CP00060-I-00

SHEET: 1 OF 4

| REV | DATE | DESCRIPTION | DRAWN BY | CHECKED BY | APPROVED BY |
|---|---|---|---|---|---|
| 0 | 4-30-08 | ISSUED FOR APPROVAL | SM | | |
| 1 | 5-27-08 | ADDED EXISTING TANK, REVISED TANK INLET | SM | | |

## VALVE SYMBOLS

- BALL VALVE (OPEN)
- BALL VALVE (CLOSED)
- BALL VALVE W/ LOCKING HANDLE
- VENTED BALL VALVE
- VENTED BALL VALVE W/LOCKING HANDLE
- BUTTERFLY VALVE
- DIAPHRAGM VALVE
- NEEDLE VALVE
- CHECK VALVE (WAFER, SPRING, SWING, Y-CHECK)
- BACKFLOW PREVENTER
- GATE VALVE
- PRESSURE REGULATING VALVE
- PRESSURE RELIEF VALVE
- PRESSURE RELIEF VALVE (3-WAY)
- SAMPLE POINT VALVE (NEEDLE, BALL) — SP
- SOLENOID VALVE — S
- FLOAT VALVE
- ELECTRIC, AIR, ETC. — ACTUATED BUTTERFLY VALVE
- ACTUATED DIAPHRAGM VALVE
- EDUCTOR

## CONNECTION SYMBOLS

- CONCENTRIC REDUCER (LINE-SIZE REDUCTION)
- CAPPED LINE
- UNION
- FLANGE CONNECTION
- FLEX CONNECTOR, VIBRATION ISOLATOR
- FLEXIBLE LINE, HOSE, TUBING
- CAMLOK FITTING
- GAUGE ISOLATOR, GAUGE GUARD
- FLOW ARROW
- DRAIN — FLOOR DRAIN, DRAIN CONNECTION
- SOURCE LEADER (TAG)
- A / 2 — REFERENCE LETTER; LINE CONTINUATION (TAG); SHEET NUMBER

## INSTRUMENTATION SYMBOLS

- PI 00 — IN-LINE PRESSURE INDICATOR
- PI 00 — PANEL-MOUNT PRESSURE INDICATOR
- PI 00 — IN-LINE PRESSURE INDICATOR WITH ISOLATION VALVE BLAH
- PI 00 — PANEL-MOUNT PRESSURE INDICATOR WITH ISOLATION VALVE
- FI — FE — IN-LINE FLOW ELEMENT WITH PANEL-MOUNT FLOW INDICATOR
- FI 00 — FE 00 — IN-LINE VORTEX-TYPE FLOW ELEMENT WITH PANEL-MOUNT FLOW INDICATOR
- AI 00 — RES, %REJ, pH, ETC.
- AE 00 — XX — IN-LINE ANALYTICAL ELEMENT WITH PANEL-MOUNT ANALYTICAL INDICATOR
- AI — RES, %REJ, pH, ETC.
- AE — XX — AE — XX — (2) IN-LINE ANALYTICAL ELEMENTS SHARING (1) PANEL-MOUNT ANALYTICAL INDICATOR
- TOC, SILICA, HARDNESS, OXYGEN, ETC.
- XX MONITOR — OFF-SKID ANALYTICAL MONITOR WHICH PULLS IN-LINE SAMPLE AND DUMPS TO A DRAIN — DRAIN

## EQUIPMENT SYMBOLS

- CENTRIFUGAL PUMP
- VERTICAL PUMP
- METERING PUMP
- BRINE PROPORTIONING PUMP OR BELOWS PUMP
- LE — SALT LEVEL PROBE
- LT — ULTRASONIC LEVEL TRANSMITTER
- PS — LO — HI — DIFFERENTIAL PRESSURE SWITCH
- CARTRIDGE FILTER HOUSING
- IN-LINE (ROTAMETER) FLOW INDICATOR
- D — PULSATION DAMPENER
- BLOWER BACKDRAFT DAMPENER
- BLOWER

## LINE SYMBOLS

- PROCESS FLOW, MAIN FLOW
- MINOR FLOW, DRAIN, BYPASS, DIVERT
- FUTURE
- AIR LINE
- POWER SUPPLY ELECTRICAL CONNECTION, 3Ø PWR
- INSTRUMENT SIGNAL
- DATA/COMMUNICATION
- LOOP — CUSTOMER POINT OF USE

## ABBREVIATIONS

| | |
|---|---|
| AC | ACTIVATED CARBON |
| ADV | ACTUATED DIAPHRAGM VALVE |
| AE | ANALYTICAL ELEMENT |
| AI | ANALYTICAL INDICATOR |
| AIT | ANALYTICAL INDICATOR TRANSMITTER |
| AL | ALARM LIGHT |
| BFV | BUTTERFLY VALVE |
| BLW | BLOWER |
| BR | BRINE |
| BP | BRINE PUMP |
| BPV | BACK PRESSURE VALVE |
| CC | CALIBRATION COLUMN |
| CP | CONTROL PANEL |
| CS | CORP STOP |
| CV | CHECK VALVE |
| CWS | CITY WATER SUPPLY |
| DPS | DIFFERENTIAL PRESSURE SWITCH |
| DPSL | DIFFERENTIAL PRESSURE SWITCH LOW |
| DV | DIAPHRAGM VALVE |
| EC | ELECTROLYTIC CELL |
| FE | FLOW ELEMENT |
| FI | FLOW INDICATOR |
| FIL | FILTER CARTRIDGE |
| FIQ | FLOW INDICATOR/TOTALIZER |
| FIT | FLOW INDICATOR TRANSMITTER |
| FM | FLOWMETER |
| FS | FLOW SWITCH |
| FSL | FLOW SWITCH LOW |
| HD | HYDROGEN DETECTOR |
| HI | HIGH |
| HS | HYPOCHLORITE SOLUTION |
| HV | HAND VALVE |
| HX | HEAT EXCHANGER |
| ISB | INTRINSICALLY SAFE BARRIER |
| LE | LEVEL ELEMENT |
| LIT | LEVEL INDICATOR TRANSMITTER |
| LO | LOW |
| LS | LEVEL SWITCH |
| LSL | LEVEL SWITCH LOW |
| MP | METERING PUMP |
| MV | MOTORIZED VALVE |
| N.O | NORMALLY OPEN |
| N.C | NORMALLY CLOSED |
| NPW | NON-POTABLE WATER |
| OSHG | ON-SITE HYPOCHLORITE GENERATION |
| P | PUMP |
| PD | PULSATION DAMPENER |
| PI | PRESSURE INDICATOR |
| PIT | PRESSURE INDICATING TRANSMITTER |
| PRV | PRESSURE REGULATING VALVE |
| PRV | PRESSURE RELIEF VALVE |
| PS | PRESSURE SWITCH |
| PSB | POWER SUPPLY BOX |
| PSL | PRESSURE SWITCH LOW |
| PT | PRESSURE TRANSMITTER |
| PV | PRESSURE VESSEL |
| PVC | POLYVINYL CHLORIDE |
| QC | QUALITY CONTROL |
| SV | SOLENOID VALVE |
| SP | SAMPLE POINT |
| SW | SOFTENED WATER |
| TK | TANK |
| TC | TEMPERATURE CONTROL |
| TE | TEMPERATURE ELEMENT |
| TI | TEMPERATURE INDICATOR |
| TS | TEMPERATURE SWITCH |
| TSH | TEMPERATURE SWITCH HIGH |
| TSL | TEMPERATURE SWITCH LOW |
| VFD | VARIABLE FREQUENCY DRIVE |
| WC | WATER CHILLER |
| WH | WATER HEATER |
| WS | WATER SOFTENER |
| YST | Y-STRAINER |

## GENERAL NOTES

1. THIS DRAWING IS FOR EQUIPMENT PROCESS FLOW INFORMATION PURPOSES ONLY. ALL EQUIPMENT, COMPONENTS, INSTRUMENTS, DEVICES, PIPING, FITTINGS, VALVES & CONDUIT SHOWN ON THIS DRAWING ARE NOT NECESSARILY SUPPLIED & INSTALLED BY CLORTEC. REFER TO CONTRACT DOCUMENTS. CLORTEC SCOPE OF SUPPLIES FOR CLORTEC RESPONSIBILITY IN THIS PROJECT.
2. ALL PIPING FITTINGS & VALVES ARE SCH. 80. ALL TUBING ARE BLACK POLYETHYLENE.
3. ELECTRICAL POWER, WATER SUPPLY, POINT OF INJECTION AND SCADA ARE PROVIDED BY OTHERS.
4. ALL UNDER GROUND WORK, CONCRETE WORK, WALL AND ROOF PENETRATIONS ARE DONE BY OTHERS.
5. ALL ELECTRICAL CONDUITS, WIRING ,JUNCTION AND PULL BOXES WILL BE PROVIDED BY OTHERS.
6. ALL PAINTING AND COATING TO BE PROVIDED BY OTHERS.
7. ALL BACKBOARDS AND SUPPORTS TO BE PROVIDED BY OTHERS.
8. CUSTOMER TO PROVIDE WATER SUPPLY PRESSURE & TEMPERATURE.
9. CUSTOMER TO PROVIDED DETAILLED DOSING ROUTINE.
10. CUSTOMER TO PROVIDED HYPOCHLORITE FEEDING SYSTEM PRESSURE.
11. ALL ELECTRICAL DISCONNECT SWITCHES ARE PROVIDED BY OTHERS.


SEVERN TRENT SERVICES — CLORTEC

2660 Columbia Street Torrance, Ca. 90503

TELEPHONE No: (310) 533-5849 E-MAIL:
FAX No: (310) 618-1384 WEB SITE: www.severntrentservices.com


UNLESS OTHERWISE NOTED TOLERANCES:

| TYPE: | INCHES | [MM] |
|---|---|---|
| FRACTIONS | ± 1/8" | |
| .X | ± .1" | ± 2.5 |
| .XX | ± .02" | ± .51 |
| .XXX | ± .005" | ± .127 |
| ANGLES | ± 1° | |


NOTICE OF CONFIDENTIALITY

THIS DOCUMENT CONTAINS PROPRIETARY INFORMATION THAT IS AND SHALL REMAIN THE PROPERTY OF SEVERN TRENT WATER PURIFICATION, INC. AND IS TO BE RETURNED IMMEDIATELY UPON REQUEST. ITS CONTENTS MAY NOT BE REPRODUCED, DISTRIBUTED, CIRCULATED, OR DISCLOSED TO THIRD PARTIES. RECIPIENT WILL NOT USE THIS INFORMATION FOR ANY PURPOSES WITHOUT PRIOR WRITTEN CONSENT OF SEVERN TRENT WATER PURIFICATION, INC.


**BRIDGE CITY**
JEFFERSON PARISH, LA

**CT-450 (450 LBS/DAY)**
RACK MOUNTED ON-SITE SODIUM HYPOCHLORITE GENERATION SYSTEM
PIPING AND INSTRUMENTATION DIAGRAM

| SCALE: | CLORTEC JOB No | SIZE | REV: |
|---|---|---|---|
| NTS | CP00060 | B | 1 |
| DWG No | | SHEET | |
| CP00060-I-00 | | 2 OF 4 | |

| REV | DATE | DESCRIPTION | DRAWN BY | CHECKED BY | APPROVED BY |
|---|---|---|---|---|---|
| 0 | 4-30-08 | ISSUED FOR APPROVAL | SM | | |
| 1 | 5-27-08 | ADDED EXISTING TANK, REVISED TANK INLET | SM | | |

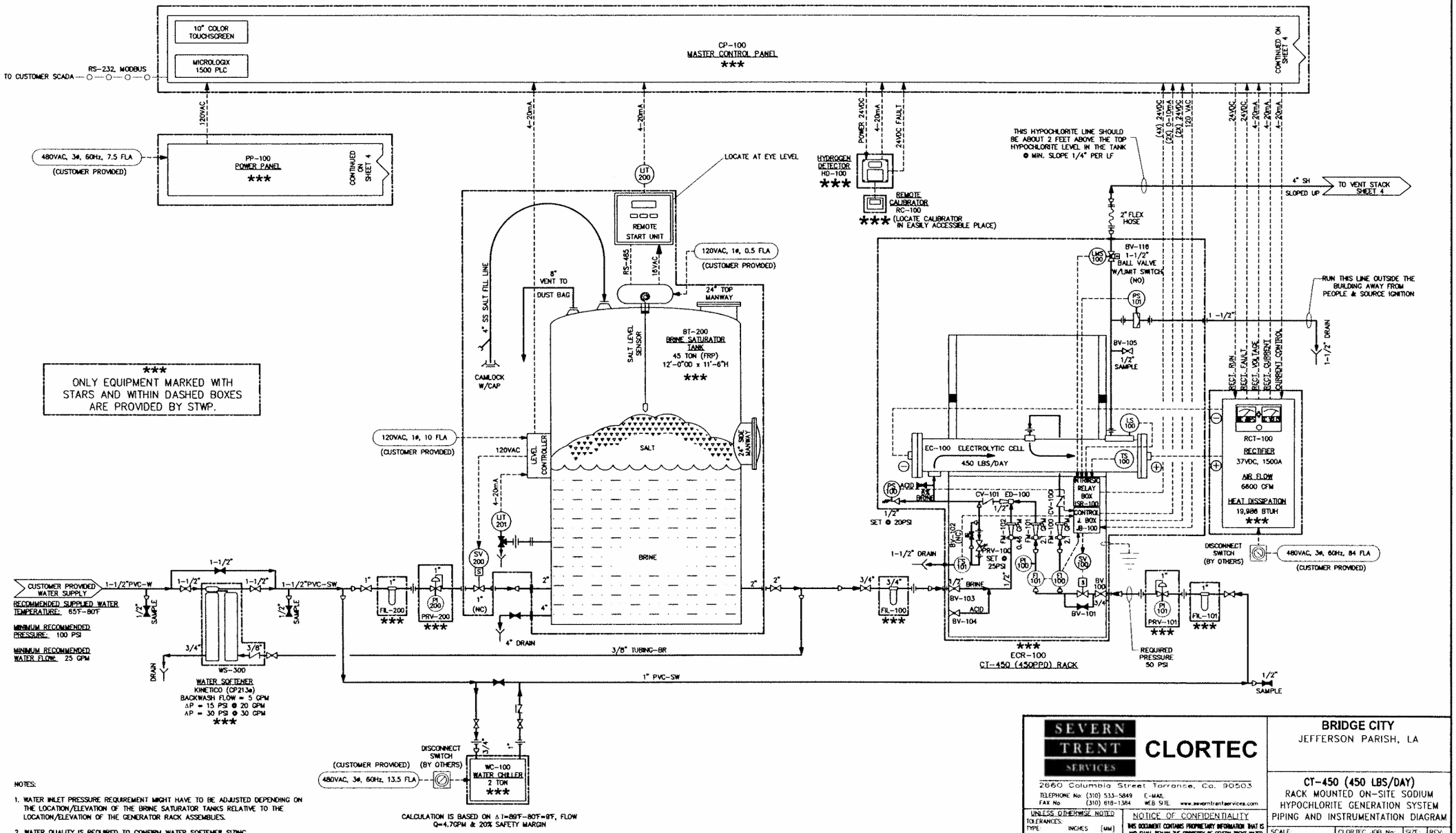


***
ONLY EQUIPMENT MARKED WITH STARS AND WITHIN DASHED BOXES ARE PROVIDED BY STWP.

NOTES:

1. WATER INLET PRESSURE REQUIREMENT MIGHT HAVE TO BE ADJUSTED DEPENDING ON THE LOCATION/ELEVATION OF THE BRINE SATURATOR TANKS RELATIVE TO THE LOCATION/ELEVATION OF THE GENERATOR RACK ASSEMBLIES.
2. WATER QUALITY IS REQUIRED TO CONFIRM WATER SOFTENER SIZING.
3. THESE WATER SOFTENERS NEED TO BE INSTALLED AT THE SAME ELEVATION & CLOSE TO BRINE TANK


SEVERN TRENT SERVICES
CLORTEC
2660 Columbia Street Torrance, Ca. 90503
TELEPHONE No: (310) 533-5849 E-MAIL
FAX No: (310) 618-1364 WEB SITE: www.severntrentservices.com


UNLESS OTHERWISE NOTED
TOLERANCES:

| TYPE: | INCHES | [MM] |
|---|---|---|
| FRACTIONS | ± 1/8" | |
| .X | ± .1" | ± 2.5 |
| .XX | ± .02" | ± .51 |
| .XXX | ± .005" | ± .127 |
| ANGLES | ± 1° | |


NOTICE OF CONFIDENTIALITY
THIS DOCUMENT CONTAINS PROPRIETARY INFORMATION THAT IS AND SHALL REMAIN THE PROPERTY OF SEVERN TRENT WATER PURIFICATION, INC. AND IS TO BE RETURNED IMMEDIATELY UPON REQUEST. ITS CONTENTS MAY NOT BE REPRODUCED, DISTRIBUTED, CIRCULATED, OR DISCLOSED TO THIRD PARTIES. RECIPIENT WILL NOT USE THIS INFORMATION FOR ANY PURPOSES WITHOUT PRIOR WRITTEN CONSENT OF SEVERN TRENT WATER PURIFICATION, INC.


**BRIDGE CITY**
JEFFERSON PARISH, LA

**CT-450 (450 LBS/DAY)**
RACK MOUNTED ON-SITE SODIUM HYPOCHLORITE GENERATION SYSTEM
PIPING AND INSTRUMENTATION DIAGRAM

| SCALE | CLORTEC JOB No: | SIZE | REV. |
|---|---|---|---|
| NTS | CP00060 | B | 1 |
| DWG No: CP00060-I-00 | | SHEET: 3 OF 4 | |

| REV | DATE | DESCRIPTION | DRAWN BY | CHECKED BY | APPROVED BY |
|---|---|---|---|---|---|
| 0 | 4-30-08 | ISSUED FOR APPROVAL | SM | | |
| 1 | 5-27-08 | ADDED EXISTING TANK, REVISED TANK INLET | SM | | |

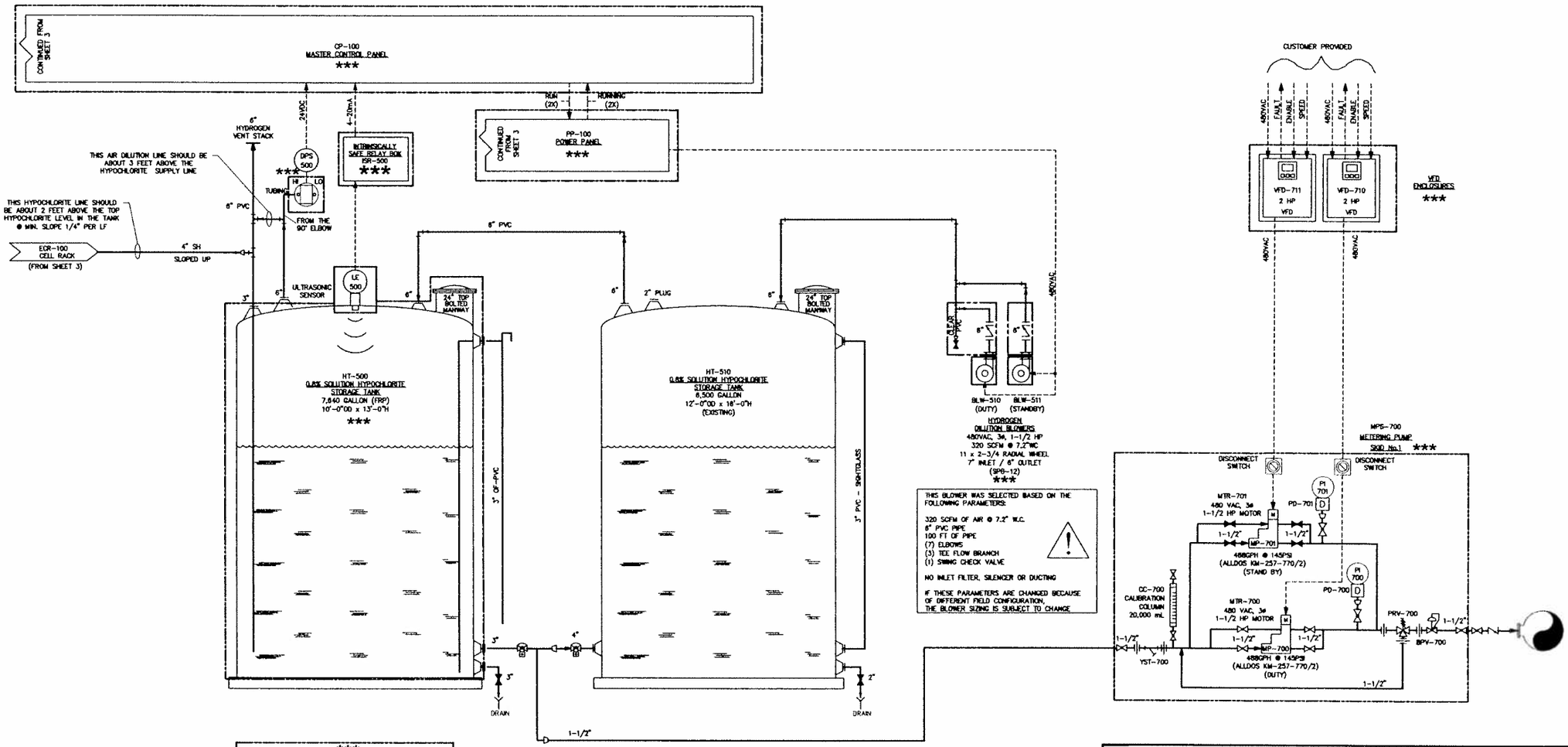


***
ONLY EQUIPMENT MARKED WITH STARS AND WITHIN DASHED BOXES ARE PROVIDED BY STWP.

SEVERN TRENT SERVICES

**CLORTEC**

2660 Columbia Street Torrance, Ca. 90503
TELEPHONE No: (310) 533-5849 E-MAIL
FAX No. (310) 618-1384 WEB SITE: www.severntrentservices.com

UNLESS OTHERWISE NOTED
TOLERANCES:

| TYPE: | INCHES | [MM] |
|---|---|---|
| FRACTIONS | ± 1/8" | |
| .X | ± .1" | ± 2.5 |
| .XX | ± .02" | ± .51 |
| .XXX | ± .005" | ± .127 |
| ANGLES | ± 1° | |

NOTICE OF CONFIDENTIALITY
THIS DOCUMENT CONTAINS PROPRIETARY INFORMATION THAT IS AND SHALL REMAIN THE PROPERTY OF SEVERN TRENT WATER PURIFICATION, INC. AND IS TO BE RETURNED IMMEDIATELY UPON REQUEST. ITS CONTENTS MAY NOT BE REPRODUCED, DISTRIBUTED, CIRCULATED, OR DISCLOSED TO THIRD PARTIES. RECIPIENT WILL NOT USE THIS INFORMATION FOR ANY PURPOSES WITHOUT PRIOR WRITTEN CONSENT OF SEVERN TRENT WATER PURIFICATION, INC.

**BRIDGE CITY**
JEFFERSON PARISH, LA

**CT-450 (450 LBS/DAY)**
RACK MOUNTED ON-SITE SODIUM HYPOCHLORITE GENERATION SYSTEM
PIPING AND INSTRUMENTATION DIAGRAM

| SCALE: | CLORTEC JOB No | SIZE: | REV: |
|---|---|---|---|
| NTS | CP00060 | B | 1 |
| DWG No: CP00060-I-00 | | SHEET: 4 OF 4 | |

# MANDATORY PRE-BID CONFERENCE SIGN-IN SHEET

**DATE: May 11, 2010**

**BID #50-97299**

**INSTALL SODIUM HYPOCHLORITE GENERATION EQUIPMENT AT BRIDGE CITY WWTP**

| NAME | COMPANY NAME & ADDRESS | PHONE & FAX NUMBER | E-MAIL ADDRESS |
|---|---|---|---|
| 1) Thomas Benan | BLD Services LLC<br>2424 Tulez St<br>Kenner LA 70062 | 504 466 344[illegible]<br>504 461 5971[illegible] | [illegible] |
| 2) John Simoneaux | LOU-CON INC<br>3300 Stanard Hwy<br>Mevaux LA | 504 271 3431<br>504 271 1184 | [illegible]@aol.com |
| 3) JD Smith | Gottfried Contracting<br>6 Meyers Rd<br>Covington LA 70435 | 985 893-3[illegible]<br>892 5238 | [illegible]@gottfried[illegible].com<br>[illegible]@gottfried[illegible].com |
| 4) Mike [illegible] | [illegible]<br>[illegible]<br>[illegible] | [illegible] | [illegible] |
| 5) [illegible] | [illegible] | [illegible] | [illegible] |
| 6) [illegible] | [illegible] | [illegible] | [illegible] |

| NAME | COMPANY NAME & ADDRESS | PHONE & FAX NUMBER | E-MAIL ADDRESS |
|---|---|---|---|
| 7) [illegible] | [illegible] | 731-[illegible]<br>731-[illegible] | [illegible] |
| 8) GLEN SMITH | PARSON, SANDERSON<br>405 COMMERCE ST<br>HARRIMAN, LA 70123 | 733-1332 T<br>736-9348 F | GLEN SMITH @ PARSON AND SANDERSON.COM |
| 9) Craig Cure | Hydro-Air Inc<br>400 Aycock St<br>Arab, LA 70032 | (504) 279 0452 F<br>(504) 277-8903 F | K+mrdr422@yahoo.com |
| 10) RON SARAGUSA | KASTNER ELECT, INC<br>3183 TERRACE AVE<br>SLIDELL, LA 70458 | ~~985-643-9258~~<br>~~985-643-9358~~<br>985-643-9358<br>985-643-9258 | ~~RONSARAGUSA@MSN.COM~~<br>RONSARAGUSA@MSN.COM |
| 11) Rickey Kastner Jr | Kastner Electric, Inc | " | rjkjr@kastner electric.com |
| 12) | | | |
| 13) | | | |