EXHIBIT L

WEST GRAND TERRE ISLAND RESTORATION (BA-0197)

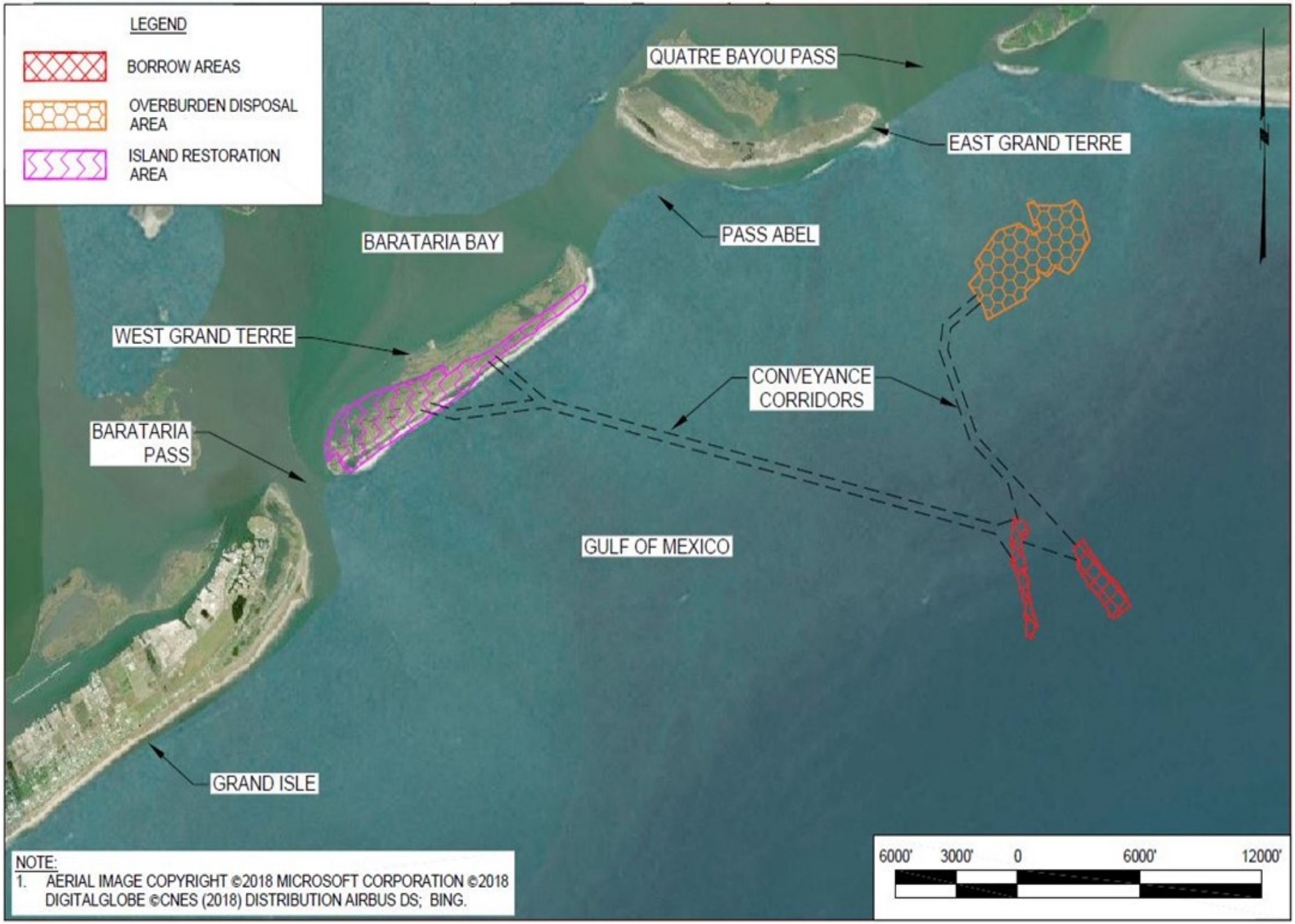

NOTE:
1. AERIAL IMAGE COPYRIGHT ©2018 MICROSOFT CORPORATION ©2018 DIGITALGLOBE ©CNES (2018) DISTRIBUTION AIRBUS DS; BING.

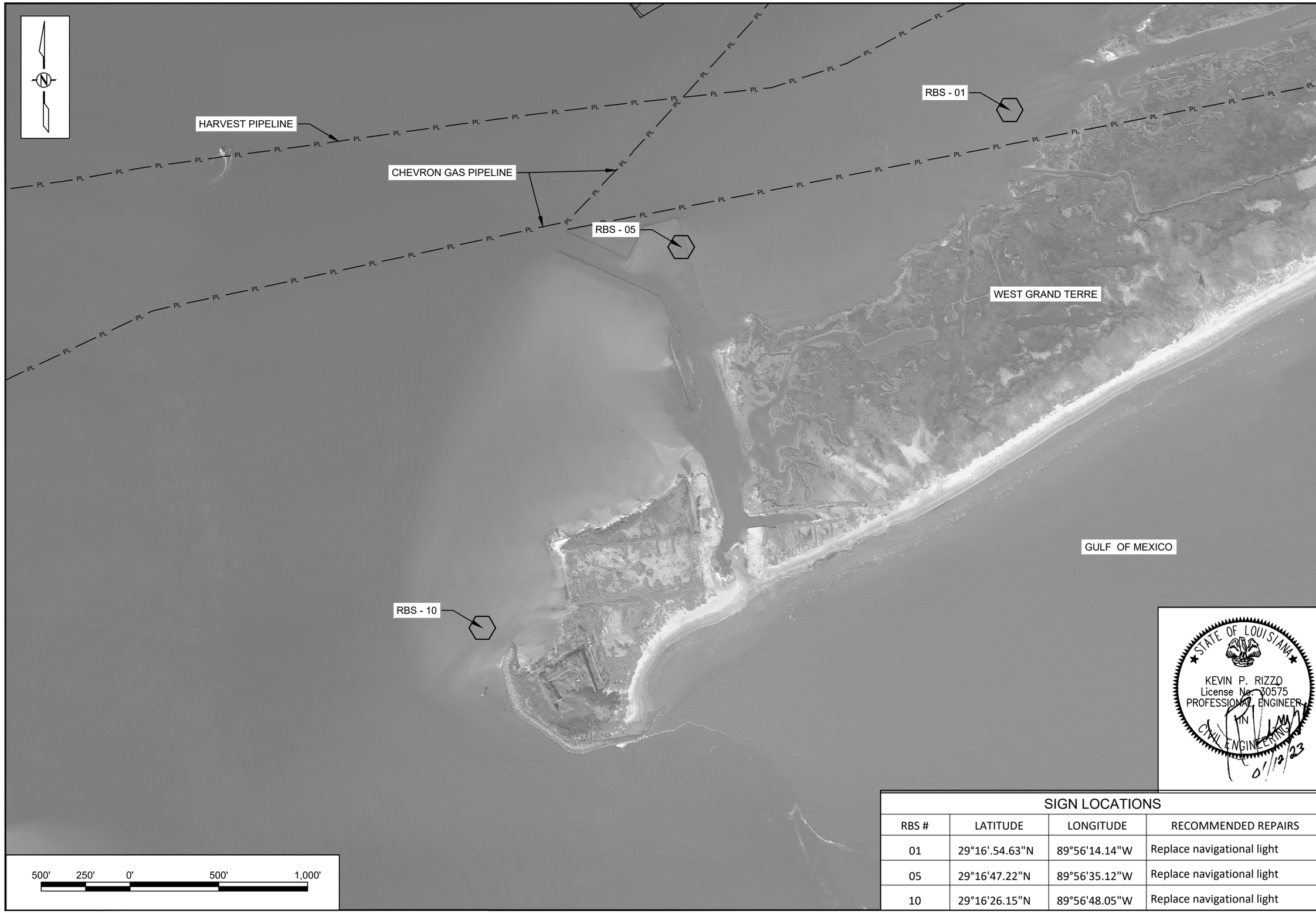

STATE OF LOUISIANA
KEVIN P. RIZZO
License No. 30575
PROFESSIONAL ENGINEER IN CIVIL ENGINEERING
01/12/23

SIGN LOCATIONS

RBS #	LATITUDE	LONGITUDE	RECOMMENDED REPAIRS
01	29°16'.54.63"N	89°56'14.14"W	Replace navigational light
05	29°16'47.22"N	89°56'35.12"W	Replace navigational light
10	29°16'26.15"N	89°56'48.05"W	Replace navigational light

REV.	DATE	DESCRIPTION	BY
01	01/25/23	CPRA COMMENTS	MEB

DELTA COAST CONSULTANTS, LLC

COASTAL PROTECTION AND RESTORATION AUTHORITY
150 TERRACE AVENUE
BATON ROUGE, LOUISIANA 70802

SIGN LOCATIONS (BA-0197)

DESIGNED BY: MEB/KPR
APPROVED BY: KPR

BARATARIA BASIN SIGN REPLACEMENT

STATE PROJECT NUMBER: BA-0197
DRAWN BY: BAD

DATE: 1/12/23

SHEET 17 OF 18

PERMANENT SIGN NOTES:

1. THE 2" BORDER ON THE WARNING SIGN SHALL BE REFLECTIVE MATERIAL OF ORANGE COLOR. THE LETTERING FIELD SHALL BE A RETRO-REFLECTIVE MATERIAL OF WHITE COLOR. THE LETTERING FOR THE WARNING SIGNS SHALL BE BLACK. WARNING SIGNS SHALL BE PLACED ON SIDE OF PILE FACING AWAY FROM STRUCTURE.

2. ONE (1) PERMANENT PILE SHALL BE REQUIRED PER SIGN EXCEPT WHERE NOTED. TWO PILES SPACED 4-FOOT ON CENTER SHALL BE REQUIRED FOR SIGNS 6&7 FOR BA-0202 SHOWN ON SHEET 13. SIGN WILL BE INSTALLED AT A LATER DATE BY OWNER.

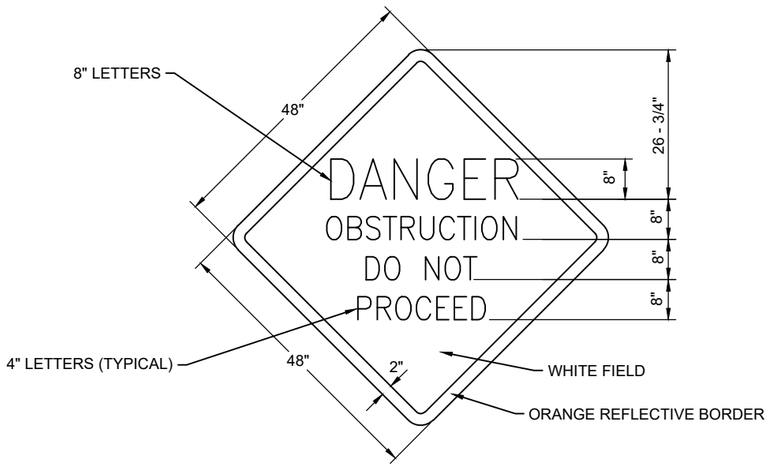

SIGN DETAIL
(NOT TO SCALE)

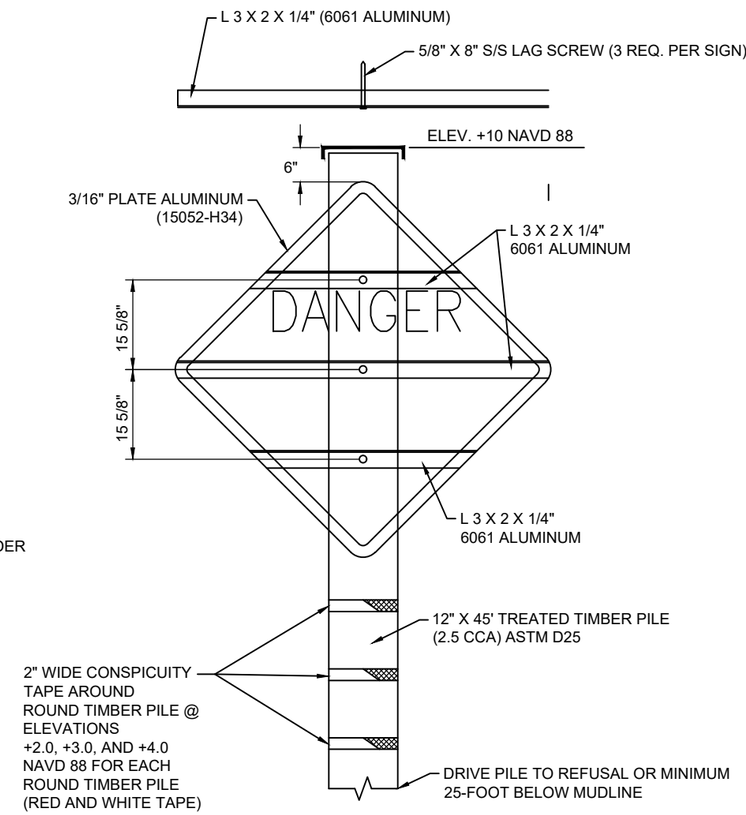

ELEVATION VIEW
(NOT TO SCALE)

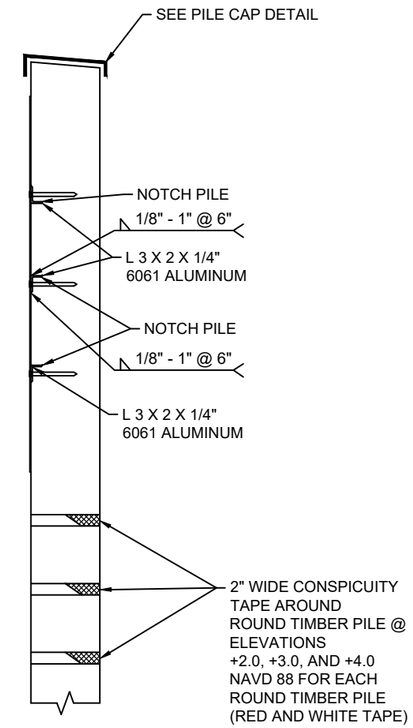

SIDE VIEW
(NOT TO SCALE)

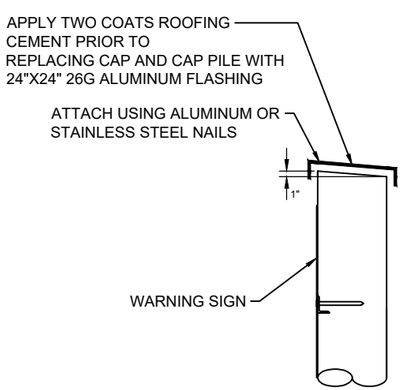

TYPICAL TIMBER PILE CAP SIDE VIEW
(NOT TO SCALE)

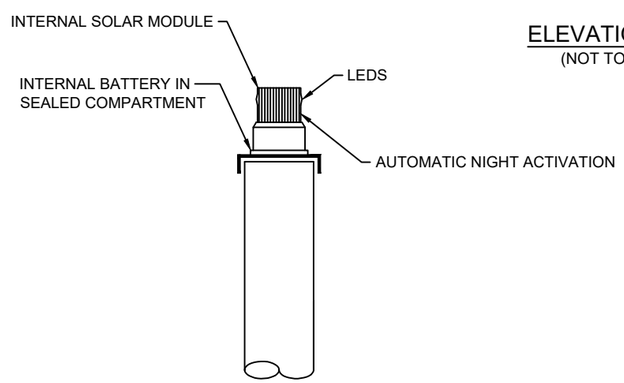

NAVIGATIONAL LIGHT DETAIL - ELEVATION VIEW
(NOT TO SCALE)

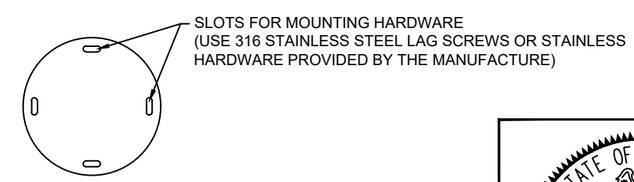

NAVIGATIONAL LIGHT DETAIL - BASE VIEW
(NOT TO SCALE)

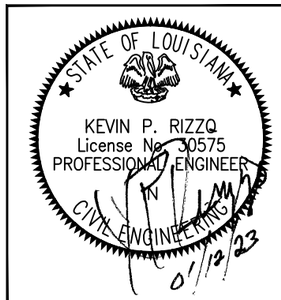

REV.	DATE	DESCRIPTION	BY
01	01/25/23	CPRA COMMENTS	MEB

DELTA COAST CONSULTANTS, LLC

COASTAL PROTECTION AND RESTORATION AUTHORITY
150 TERRACE AVENUE
BATON ROUGE, LOUISIANA 70802

TYPICAL DETAILS

DESIGNED BY: MEB/KPR
APPROVED BY: KPR

BARATARIA BASIN SIGN REPLACEMENT

STATE PROJECT NUMBER:
DRAWN BY: BAD

DATE: 1/12/23

SHEET 18 OF 18